COMPRESSED AIR TREATMENT

Product catalogue

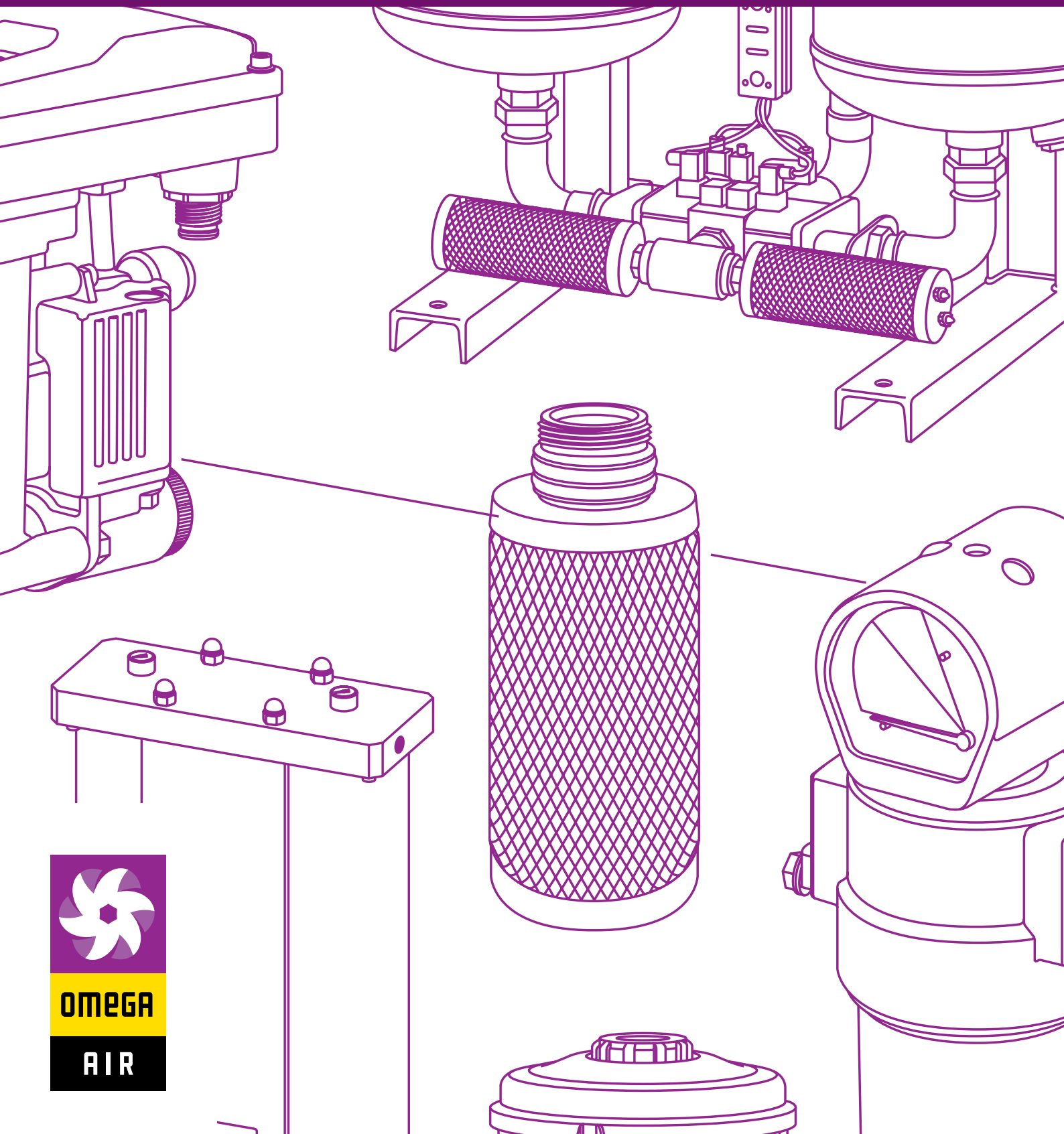

OMEGA AIR

OMEGA AIR

Better air

OMEGA

AIR

Compressed air treatment

BASIC PRINCIPLES OF MOST TYPICAL COMPRESSED AIR APPLICATION

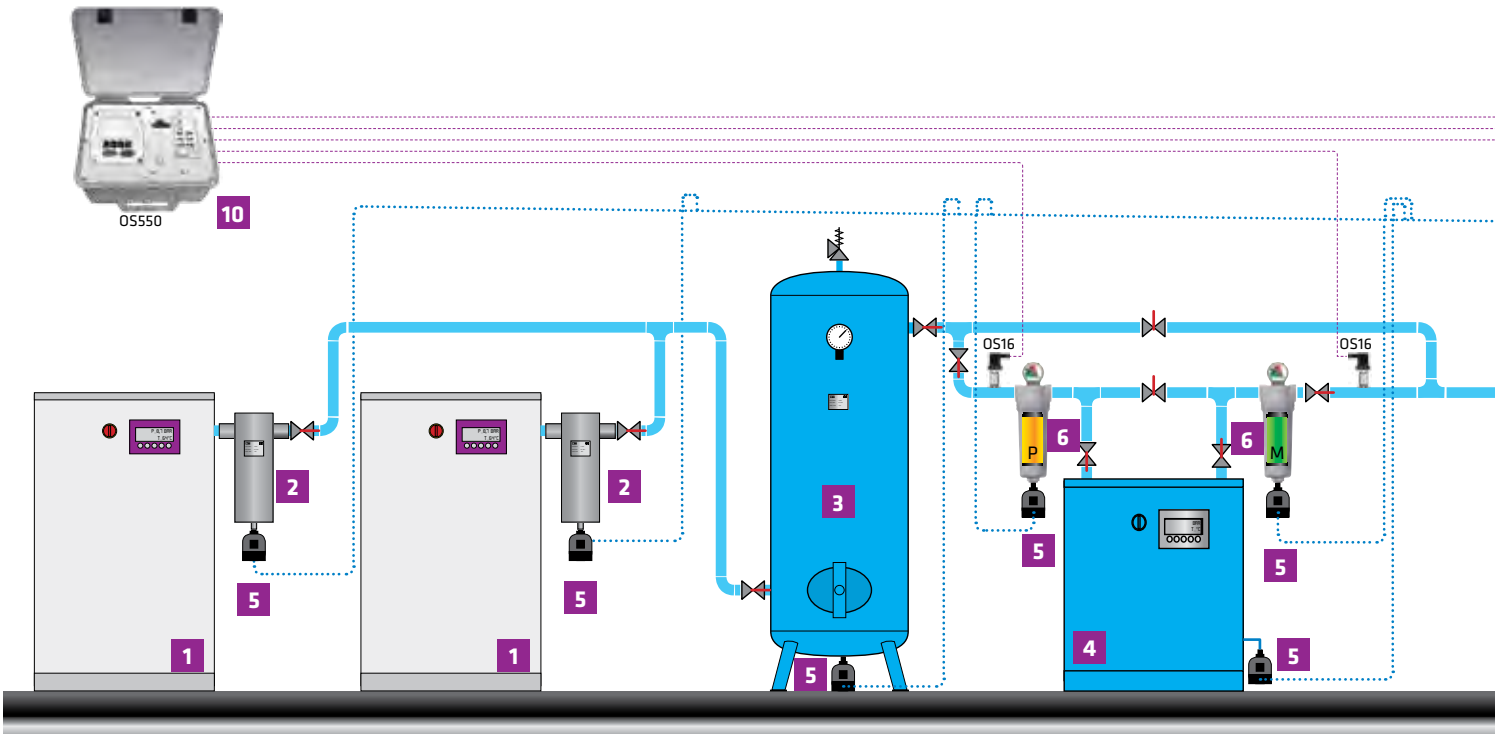

1 COMPRESSOR

The basic working principle of an air compressor is to compress atmospheric air, which is then used as per the requirements. In the process, atmospheric air is drawn in through an intake valve; more and more air is pulled inside a limited space mechanically by means of piston, impeller, or vane.

Since the amount of pulled atmospheric air is increased in the receiver or storage tank, volume is reduced and pressure is raised automatically. In simpler terms, free or atmospheric air is compressed after reducing its volume and at the same time, increasing its pressure.

There are three major types, namely, reciprocating, rotary, and centrifugal compressor.

2 CYCLONE CONDENSATE SEPARATOR

Cyclone condensate separators use centrifugal motion to force liquid water out of compressed air. The spinning causes the condensate to join together on the centrifugal separators walls when the condensate gains enough mass it falls to the bottom of the separators bowl where it pools in the sump until it is flushed out of the system by the automatic float drain valve.

They are installed following aftercoolers to remove the condensed moisture.

3 PRESSURE VESSEL

Pressure vessel plays very important role in compressed air system:

- damping pulsations caused by reciprocating compressors,
- providing a location for free water and lubricant to settle from the compressed air stream,
- supplying peak demands from stored air without needing to run an extra compressor,
- reducing load/unload or start/stop cycle frequencies to help screw compressors run more efficiently and reduce motor starts,
- slowing system pressure changes to allow better compressor control and more stable system pressures.

4 COMPRESSED AIR DRYER

Compressed air leaving the compressor aftercooler and moisture separator is normally warmer than the ambient air and fully saturated with moisture. As the air cools the moisture will condense in the compressed air lines. Excessive entrained moisture can result in undesired pipe corrosion and contamination at point of end use.

For this reason some sort of air dryer is normally required.
Some end use applications require very dry air, such as compressed air distribution systems where pipes are exposed to winter conditions. Drying the air to dew points below ambient conditions is necessary to prevent ice buildup.

Common types:
- refrigerant
- dessicant
- membrane

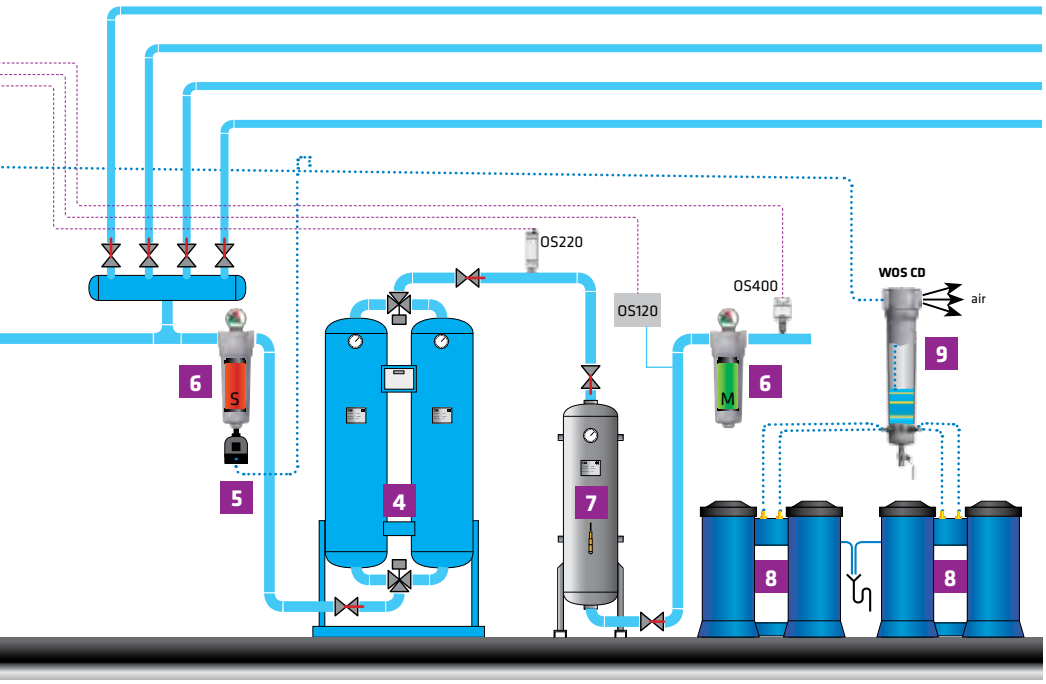

END USER

- Replace inappropriate end use applications with efficient models (vortex nozzles, atomizers).
- Install a flow controller to lower plant pressure and reduce artificial demand caused by higher than required pressures.
- Turn off air consuming equipment, using electric solenoids or manual shutoff valves.
- Avoid operation of air tools without a load, as this consumes more air than a tool under load.
- Replace worn tools, as they often require higher pressure and consume excess compressed air than tools in good shape.
- Lubricate air tools as recommended by the manufacturer. Keep air used by all end uses free of condensate in order to maximize tool life and effectiveness.
- Where possible and practical, group end use air equipment that has similar air requirements of pressure and air quality.

5 CONDENSATE DRAIN

Drains are needed at all separators, filters, dryers and receivers in order to remove the liquid condensate from the compressed air system.

Failed drains can allow slugs of moisture to flow downstream that can overload the air dryer and foul end use equipment.

6 FILTER

Compressed air filters are used for high efficient removal of solid particles, water, oil aerosols, hydrocarbons, odour and vapours from compressed air systems.
To meet the required compressed air quality appropriate filter element must be installed into filter housing.

7 ACTIVATED CARBON TOWER

Activated carbon tower eliminates hydrocarbon vapours and odours from compressed air. Towers are filled with activated carbon adsorbent that adsorbs contaminants onto the surface of its internal pores. Activated carbon towers are used at applications where content of oil vapours needs to be reduced to minimum.

Activated carbon towers can be incorporated in existing compressed air systems significantly minimising the risks of contamination.
They are able to absorb oil carry-over (both liquid and vapour) to provide the plant with technically oil-free compressed air.

8 OIL/WATER SEPARATOR

Local environmental laws and regulations state that condensate drained from compressed air systems cannot be returned to the sewage system due to the content of compressor lubricating oil.

Water/oil separators are one of the most efective and economical solution. Multi-stage separation process using oleophilic filters and activated carbon, ensures exceptional performance and trouble free operation.

9 CONDENSATE DISTRIBUTOR

WOS CD is intended for systems, where amount of generated condensate exceeds capacity of single largest available WOS water oil separator. WOS CD can evenly distribute collected condensate between up to three WOS-35 water oil separators.

WOS CD is equipped with flow distributor on the inlet port and up to 8 hose tail connections mounted.

10 CONTROL SYSTEM

It is always good to know the parameters value of your compressor air station. The control system with integrated sensors records and controls all important parameters:
- pressure
- temperature
- Dew point
- flow

Compressed air filters

AF
aluminium compressed air filters

16 bar page 12

AAF
aluminium compressed air filters

16 bar page 14

CF
aluminium compressed air filters

20 bar page 16

BF
welded carbon steel compressed air filters

16 bar page 18

WFIT
welded stainless steel filters-threaded conn.

16 (12) bar page 20

WHFIT
high pressure stainless steel filters

50 bar page 22

WFIF
welded stainless steel filters-flanged conn.

16 (12, 10) bar page 24

P-VAC
vacuum pump protection filters

20-2000 mbar page 26

M-VAC
medical vacuuum filters

20-2000 mbar page 28

AFs
silicone free compressed air filters

16 bar page 30

HF
cast aluminium high pressure filters

50 bar page 32

AHP
aluminium high pressure filters

64 bar page 34

CHP
carbon steel high pressure filters

100, 250, 400 bar page 36

IHP
stainless steel high pressure filters

100, 250, 400 bar page 38

PF
stainless steel process filters

16 (12, 10) bar page 40

HPF
high pressure stainless steel process filters

50 bar page 42

SF
stainless steel sterile filters

16 (10) bar page 44

SPF
stainless steel sterile filters

16 (12) bar page 46

AV
stainless steel air venting filters

page 48

Condensate separators

CKL-B
aluminium condensate separators

16 bar page 52

CKL-C
aluminium condensate separators

20 bar page 54

CS, CS SS
welded carbon (stainless) steel cond. separators

16 bar page 56

SFH, SFH SS
welded carbon (stainless) steel cond. separators

16 bar page 58

CKL-HF
cast aluminium HP condensate separators

50 bar page 60

CKL-AHP
aluminium HP condensate separators

64 bar page 62

CKL-CHP
carbon steel HP condensate separators

100, 250, 400 bar page 64

Compressed air filter elements

B grade 15 µm prefilter

quality class (ISO 8573-1)	
solids:	7
oils	-
material	

- sintered brass

P grade 3 µm prefilter

quality class (ISO 8573-1)	
solids:	6
oils	-
material	

- acrylic fibres
- cellulose

R grade 1 µm prefilter

quality class (ISO 8573-1)	
solids:	3
oils	-
material	

- borosilicate micro fibres

M grade 0,1 µm microfilter

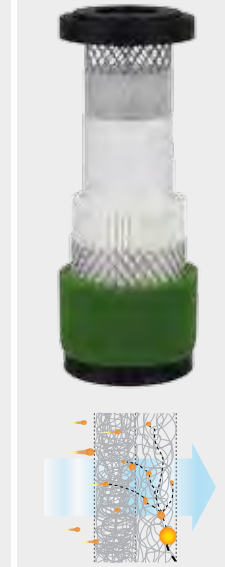

quality class (ISO 8573-1)	
solids:	2
oils	2
material	

- borosilicate micro fibres

S grade 0,01 µm microfilter

quality class (ISO 8573-1)	
solids:	1
oils	1
material	

- borosilicate micro fibres

A grade activated carbon

quality class (ISO 8573-1)	
solids:	1
oils	1
material	

- activated carbon
- borosilicate micro fibres

A² grade adsorption

quality class (ISO 8573-1)	
solids:	1
oils	0/1
material	

- activated carbon
- borosilicate micro fibres

H² grade catalyst

quality class (ISO 8573-1)	
solids:	1
oils	-
material	

- hopcalite
- borosilicate micro fibres

MS² grade molecular sieve

quality class (ISO 8573-1)	
solids:	1
oils	-
material	

- molecular sieve
- borosilicate micro fibres

I grade 1/20 µm prefilter

quality class (ISO 8573-1)	
solids:	-
oils	-
material	

- sintered stainless steel 1.4404

sterile sterilisation

quality class (ISO 8573-1)	
solids:	1
oils	-
material	

- borosilicate micro fibres

N grade 5/25 µm prefilter

quality class (ISO 8573-1)	
solids:	-
oils	-
material	

- stainless steel mesh

Differential pressure indicators

PDI 16
differential pressure indicator

16 bar page 68

MDA 60
differential pressure indicator

20 bar page 69

MDM 40
differential pressure indicator

20 bar page 70

MDM 60
differential pressure indicator

16 bar page 71

EPG 60
differential pressure indicator

16 bar page 72

MDH
differential high pressure indicator

50 bar page 73

OCI
oil content indicator

16 bar page 74

Accessories

AK
assembly kit for filters

page 76

2S, 3S, 2M, 3M
assembly kit for filters

page 76

WS/WM
wall mounting kit for filters

page 76

SG
sight glass

page 77

ES
exhaust silencer

page 77

Condensate drains

EMD
electronic condensate drains

16 bar page 80

ECD-B
electronic condensate drains

16 bar page 82

CDI 16B
electronic condensate drains

16 bar page 84

IED
electronic condensate drains

16 bar page 86

EMD HP
electronic high pressure condensate drains

50 bar page 87

TD M
timer controlled condensate drains

16, 25, 50, 150 bar page 88

AOK 20B
automatic condensate drain

20 bar page 90

AOK 20SS
automatic stainless steel condensate drain

20 bar page 91

AOK 50B
automatic condensate drain

50 bar page 92

AOK 16B
automatic condensate drain

16 bar page 93

AOK 16F
automatic condensate drain

16 bar page 94

MCD
manual condensate drain

20 bar page 95

MCDi
manual stainless steel condensate drain

20 bar page 95

MCD-B
manual condensate drain

16 bar page 95

Water/oil separators

WOSm
water/oil separators

page 98

WOS
water/oil separators

page 100

WOS CD
condensate distributor

page 102

Pressure vessels

TP PED
standard pressure vessels - PED certification

13, 10 bar page 140

TP ASME
standard pressure vessels - ASME certification

page 142

TP
custom made pressure vessels

x bar page 143

Equipment

PP
painting air filtration systems

16 bar page 146

B-AIR
breathing air filtration systems

16 bar page 148

B-AIR plus
breathing air filtration systems

16 bar page 150

AIRWATT
heat recovery units

16 bar page 152

AWS
air/water station

10 bar page 155

BS, PETRO-PACK
petrol station compressor

12 bar page 156

Compressed air dryers

A-DRY
heatless adsorption dryers

4 to16 bar page106

X-DRY
heatless regenerated modular adsorption dryers

4 to16 bar page108

B-DRY
heatless regenerated adsorption dryers

4 to16 bar page110

F-DRY
heatless regenerated adsorption dryers

4 to16 bar page112

R-DRY
heat regenerated adsorption dryers

4 to11 bar page114

HP-DRY
high pressure dryers

50,100,250,400 bar page116

M-DRY
membrane dryers

12 bar page122

OMD
refrigerated compressed air dryers

14 bar page126

OMH
high inlet temperature dryers

14, (16) bar page128

OHP
high pressure compressed air dryers

50 bar page130

SORBEO
adsorbents

page118

TAC
activated carbon towers

16 bar page120

ACA
air cooled aftercoolers

7 bar page124

ACW
water cooled aftercoolers

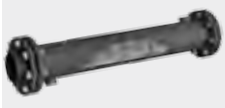

16 bar page125

Measuring equipment

SENSORS, DATA LOGGERS, DETECTORS

page 134-137

Compressed air filters

AF SERIES

ALUMINIUM COMPRESSED AIR FILTERS

operating pressure	**16** bar
volume flow rate	**60** to **2760** Nm^3/h
connections	**3/8''** to **3''**
operating temp. range	**1,5** to **65** °C
standard colour	**RAL 5012**

APPLICATIONS

- general industrial applications
- automotive
- electronics
- food and beverage
- chemical
- petrochemical
- plastics
- paint

DESCRIPTION

AF filter housings are designed for high efficient removal of solid particles, water, oil aerosols, hydrocarbons, odour and vapours from compressed air[1] systems. To meet the required compressed air quality appropriate filter element (B, P, R, M, S, A, A^2, H^2, MS^2) must be installed into filter housing.

[1] For any other technical gas please contact producer or your local distributor.

PDI16

page68

MDM60

page71

MDM60C

page71

MDM60E

page71

MDA60

page69

MDM40

page70

MDM40C

page70

EPG60

page72

B; 15 µm

P; 3 µm

R; 1 µm
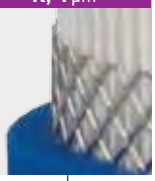

M; 0,1 µm
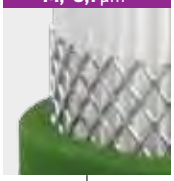

S; 0,01 µm
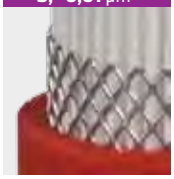

A; activated carbon

A^2; 0,1 µm

H^2; 0,1 µm
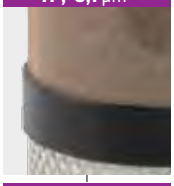

MS^2; 0,1 µm

SG

page77

IED

page86

MCD-B

page95

MCD

page95

AOK 16B

page93

AOK 20B
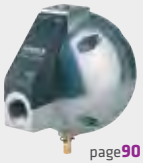
page90

TD16M

page88

CDI 16B

page84

ECD-B

page82

EMD12

page80

TECHNICAL DATA										FILTER ELEMENTS								
Filter housing size	Pipe size	Max. oper. press.	Flow rate at 7 bar(g), 20 °C		Dimensions [mm]				Mass	B sintered 15 µm	P prefilter 3 µm	R prefilter 1 µm	M microfilter 0,1 µm	S microfilter 0,01 µm	A activated carbon	A² adsorption (act. carbon) [4]	H² catalyst (hopcalite) [4]	MS² molecular sieve [4]
	inch	[bar/psi]	Nm³/h	scfm	A	B	C	D	kg									
AF 0056	3/8"	16/232	60	35	187	88	20	60	0,7	06050 B15	06050 P	06050 R	06050 M	06050 S	06050 A	-	-	-
AF 0076	1/2"	16/232	78	46	187	88	20	60	0,7	07050 B15	07050 P	07050 R	07050 M	07050 S	07050 A	07050 A²	07050 H²	07050 MS²
AF 0106	3/4"	16/232	120	70	257	88	20	80	0,8	14050 B15	14050 P	14050 R	14050 M	14050 S	14050 A	14050 A²	14050 H²	14050 MS²
AF 0186	1"	16/232	198	116	263	125	32	100	1,8	12075 B15	12075 P	12075 R	12075 M	12075 S	12075 A	12075 A²	12075 H²	12075 MS²
AF 0306	1"	16/232	335	197	363	125	32	120	2,5	22075 B15	22075 P	22075 R	22075 M	22075 S	22075 A	22075 A²	22075 H²	22075 MS²
AF 0476	1 1/2"	16/232	510	300	461	125	32	140	2,5	32075 B15	32075 P	32075 R	32075 M	32075 S	32075 A	32075 A²	32075 H²	32075 MS²
AF 0706	1 1/2"	16/232	780	459	640	125	32	160	3,2	50075 B15	50075 P	50075 R	50075 M	50075 S	50075 A	50075 A²	50075 H²	50075 MS²
AF 0946	2"	16/232	1000	588	684	163	43	520	5,1	51090 B15	51090 P	51090 R	51090 M	51090 S	51090 A	-	-	-
AF 1506	2"	16/232	1500	882	935	163	43	770	7,1	76090 B15	76090 P	76090 R	76090 M	76090 S	76090 A	-	-	-
AF 1756	2 1/2"	16/232	1680	990	935	163	43	770	6,9	76090 B15	76090 P	76090 R	76090 M	76090 S	76090 A	-	-	-
AF 2006	3	16/232	2160	1270	795	240	59	630	12,9	51140 B15	51140 P	51140 R	51140 M	51140 S	51140 A	-	-	-
AF 2406	3	16/232	2760	1620	1000	240	59	780	14,0	75140 B15	75140 P	75140 R	75140 M	75140 S	75140 A	-	-	-
quality class - solids (ISO 8573-1)										7	6	3	2	1	1[3]	1[3]	1[3]	1
residual oil content [mg/m³]										-	-	-	<0,1	<0,01	<0,005	<0,005	-	-
quality class - oils (ISO 8573-1)										-	-	-	2	1	1	0/1	-	-
pressure drop - new element [mbar / psi]										20 / 0,290	10 / 0,145	20 / 0,290	50 / 0,725	80 / 1,160	60 / 0,870	see spec.	see spec.	< 50 / 0,725
change filter cartridge at pressure drop [mbar / psi]										[1]	350 / 5,07	350 / 5,07	350 / 5,07	350 / 5,07	6 months [2]	6 months [2]	6 months [2]	
filter material										sintered brass	acrylic fibres, cellulose	borosilicate micro fibres			borosilicate micro fibres			
															activ. carbon	activ. carbon	hopcalite	molecular sieve
pleated version										-	✓	✓	✓	✓	-	✓	✓	✓
wrapped version										-	-	-	-	-	✓	-	-	-
sintered version										✓	-	-	-	-	-	-	-	-
min. operating temperature (°C / °F)										1,5 / 35	1,5 / 35	1,5 / 35	1,5 / 35	1,5 / 35	1,5 / 35	1,5 / 35	1,5 / 35	1,5 / 35
max. operating temperature (°C / °F)										65 / 149	65 / 149	65 / 149	65 / 149	65 / 149	45 / 113	45 / 113	45 / 113	45 / 113

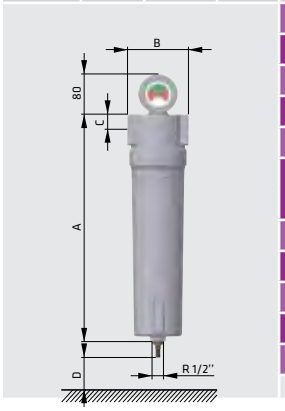

CORRECTION FACTORS

Operating pressure [bar]	2	3	4	5	6	7	8	9	10	11	12	13	14	15	16
Operating pressure [psi]	29	44	58	72	87	100	115	130	145	160	174	189	203	218	232
Correction factor	0,38	0,50	0,63	0,75	0,88	1	1,13	1,25	1,38	1,50	1,63	1,75	1,88	2,00	2,13

[1] B filter element can be cleaned with ultrasonic bath or with back flushing. Intervals of cleaning depends of application. If necessary replace filter element with new one.
[2] Filter elements "A, A², H²", must be changed periodically to suit application, but at least every 6 months. Activated carbon filters must not operate in oil saturated conditions.
[3] Valid if "S" filter cartridge is installed upstream.
[4] For elements A², H² and MS² it is necessary to reduce the flow according to technical data sheet specification.

AAF SERIES

ALUMINIUM COMPRESSED AIR FILTERS

operating pressure	**16** bar
volume flow rate	**15** to **120** Nm^3/h
connections	**1/8''** to **3/4''**
operating temp. range	**1,5** to **65** °C
standard colour	**RAL 5012**

APPLICATIONS

- general industrial applications
- automotive
- electronics
- food and beverage
- chemical
- petrochemical
- plastics
- paint

DESCRIPTION

AAF filter housings are designed for high efficient removal of solid particles, water, oil aerosols, hydrocarbons, odour and vapours from compressed air(1) systems. To meet the required compressed air quality appropriate filter element (P, R, M, S, A) must be installed into filter housing.

(1) For any other technical gas please contact producer or your local distributor.

PDI16

page68

MDM40

page70

MDM40C

page70

B; 15 µm

P; 3 µm

R; 1 µm
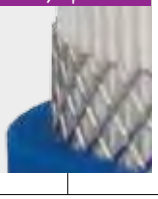

M; 0,1 µm

S; 0,01 µm
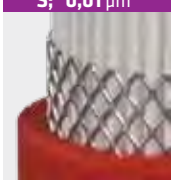

A; activated carbon

MCD-B

page95

AOK-16B

page93

TD16M

page88

EMD12

page80

IED

page86

TECHNICAL DATA

Filter housing size	Pipe size	Max.oper. pressure	Flow rate at 7 bar(g), 20 °C		Dimensions [mm]				Mass
	inch	[bar/psi]	Nm³/h	scfm	A	B	C	D	kg
AAF 0016 [2]	1/8"	16/232	15	9	110	54	17	50	0,25
AAF 0026	1/4"	16/232	30	17	153	72	19	50	0,5
AAF 0036	3/8"	16/232	30	17	153	72	19	50	0,5
AAF 0046	1/4"	16/232	60	35	187	88	20	60	0,7
AAF 0056	3/8"	16/232	60	35	187	88	20	60	0,7
AAF 0076	1/2"	16/232	78	46	187	88	20	60	0,7
AAF 0106	3/4"	16/232	120	70	257	88	20	80	0,8

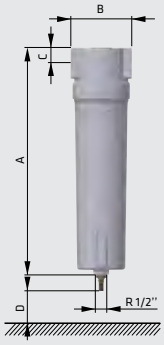

FILTER ELEMENTS

	P prefilter 3 µm	R prefilter 1 µm	M microfilter 0,1 µm	S microfilter 0,01 µm	A activated carbon	CKL-AAF
quality class - solids (ISO 8573-1)	6	3	2	1	1 [3]	-
residual oil content [mg/m³]	-	-	<0,1	<0,01	<0,005	-
quality class - oils (ISO 8573-1)	-	-	2	1	1	-
pressure drop - new element [mbar / psi]	10 / 0,145	20 / 0,290	50 / 0,725	80 / 1,160	60 / 0,870	-
change filter cartridge at pressure drop [mbar / psi]	350 / 5,07	350 / 5,07	350 / 5,07	350 / 5,07	6 months [1]	-
filter material	acrylic fibres, cellulose	borosilicate micro fibres			activated carbon	-
min. operating temperature (°C / °F)	1,5 / 35	1,5 / 35	1,5 / 35	1,5 / 35	1,5 / 35	1,5 / 35
max. operating temperature (°C / °F)	65 / 149	65 / 149	65 / 149	65 / 149	45 / 113	65 / 149

CORRECTION FACTORS

Operating pressure [bar]	2	3	4	5	6	7	8	9	10	11	12	13	14	15	16
Operating pressure [psi]	29	44	58	72	87	100	115	130	145	160	174	189	203	218	232
Correction factor	0,38	0,50	0,63	0,75	0,88	1	1,13	1,25	1,38	1,50	1,63	1,75	1,88	2,00	2,13

[1] Filter elements "A" must be changed periodically to suit application, but at least every 6 months. Activated carbon filters must not operate in oil saturated conditions.
[2] For size AAF 0016 no differential pressure indicator and no internal condensate drain is available, IED not available
[3] Valid if "S" filter cartridge is installed upstream.

CF SERIES

ALUMINIUM COMPRESSED AIR FILTERS

operating pressure	**20** bar
volume flow rate	**72** to **2760** Nm^3/h
connections	**3/8''** to **3''**
operating temp. range	**1,5** to **65** °C
standard colour	**RAL 5012**

APPLICATIONS

- general industrial applications
- automotive
- electronics
- food and beverage
- chemical
- petrochemical
- plastics
- paint

DESCRIPTION

CF filter housings are designed for high efficient removal of solid particles, water, oil aerosols, hydrocarbons, odour vapours from compressed air[1] systems. To meet the required compressed air quality appropriate filter element (B, P, R, M, S, A) must be installed into filter housing.

[1] For any other technical gas please contact producer or your local distributor.

MDA60

page 69

MDM40

page 70

MDM40C

page 70

B; 15 µm

P; 3 µm

R; 1 µm

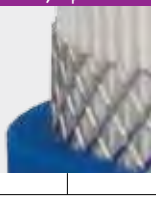

M; 0,1 µm

S; 0,01 µm

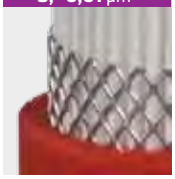

A; activated carbon

MCD

page 95

AOK 20B

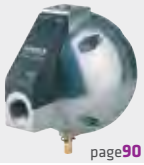

page 90

TD16M

page 88

TECHNICAL DATA

Filter housing size	Pipe size	Max. oper. pressure	Flow rate at 7 bar(g), 20 °C		Dimensions [mm]				Mass
	inch	bar/psi	Nm³/h	scfm	A	B	C	D	kg
CF 20	3/8''	20/290	72	42	187	88	20	80	0,7
CF 21	1/2''	20/290	96	56	256	88	20	80	0,8
CF 30	1/2''	20/290	150	88	278	106	25	100	1,3
CF 31	3/4''	20/290	216	127	278	106	25	100	1,3
CF 40	1''	20/290	282	166	252	125	32	120	2,1
CF 41	1''	20/290	360	212	352	125	32	140	2,4
CF 42	1 1/4''	20/290	432	254	352	125	32	140	2,4
CF 43	1 1/2''	20/290	510	300	450	125	32	160	3,2
CF 44	1 1/2''	20/290	750	441	450	125	32	160	3,2
CF 50	2''	20/290	888	522	605	160	43	180	5,1
CF 51	2''	20/290	1176	692	605	160	43	180	5,1
CF 52	2 1/2''	20/290	1440	847	685	160	43	200	6,3
CF 60	3''	20/290	1968	1158	800	240	60	300	12,9
CF 61	3''	20/290	2760	1624	800	240	60	300	12,9

FILTER ELEMENTS

	B sintered 15 µm	**P** prefilter 3 µm	**R** prefilter 1 µm	**M** microfilter 0,1 µm	**S** microfilter 0,01 µm	**A** activated carbon
CF 20	20 CB	20 CP	20 CR	20 CM	20 CS	20 CA
CF 21	21 CB	21 CP	21 CR	21 CM	21 CS	21 CA
CF 30	30 CB	30 CP	30 CR	30 CM	30 CS	30 CA
CF 31	31 CB	31 CP	31 CR	31 CM	31 CS	31 CA
CF 40	40 CB	40 CP	40 CR	40 CM	40 CS	40 CA
CF 41	41 CB	41 CP	41 CR	41 CM	41 CS	41 CA
CF 42	42 CB	42 CP	42 CR	42 CM	42 CS	42 CA
CF 43	43 CB	43 CP	43 CR	43 CM	43 CS	43 CA
CF 44	44 CB	44 CP	44 CR	44 CM	44 CS	44 CA
CF 50	50 CB	50 CP	50 CR	50 CM	50 CS	50 CA
CF 51	51 CB	51 CP	51 CR	51 CM	51 CS	51 CA
CF 52	52 CB	52 CP	52 CR	52 CM	52 CS	52 CA
CF 60	60 CB	60 CP	60 CR	60 CM	60 CS	60 CA
CF 61	61 CB	61 CP	61 CR	61 CM	61 CS	61 CA
quality class - solids (ISO 8573-1)	7	6	3	2	1	1 [3]
residual oil content [mg/m³]	-	-	-	<0,1	<0,01	<0,005
quality class - oils (ISO 8573-1)	-	-	-	2	1	1
pressure drop - new element [mbar / psi]	20 / 0,290	10 / 0,145	20 / 0,290	50 / 0,725	80 / 1,160	60 / 0,870
change filter cartridge at pressure drop [mbar / psi]	[1]	350 / 5,07	350 / 5,07	350 / 5,07	350 / 5,07	6 months [2]
filter media	sintered brass	acrylic fibres, cellulose	borosilicate micro fibres			activated carbon
pleated version	-	✓	✓	✓	✓	-
wrapped version	-	-	-	-	-	✓
sintered version	✓	-	-	-	-	-
min. operating temperature (°C / °F)	1,5 / 35	1,5 / 35	1,5 / 35	1,5 / 35	1,5 / 35	1,5 / 35
max. operating temperature (°C / °F)	65 / 149	65 / 149	65 / 149	65 / 149	65 / 149	45 / 113

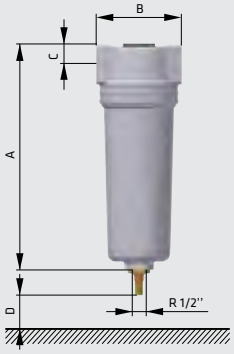

CORRECTION FACTORS

Operating pressure [bar]	2	3	4	5	6	7	8	9	10	11	12	13	14	15	16	17	18	19	20
Operating pressure [psi]	29	44	58	72	87	100	115	130	145	160	174	189	203	218	232	247	261	276	290
Correction factor	0,38	0,50	0,63	0,75	0,88	1	1,13	1,25	1,38	1,50	1,63	1,75	1,88	2,00	2,13	2,25	2,38	2,50	2,63

[1] B filter element can be cleaned with ultrasonic bath or with back flushing. Intervals of cleaning depends of application. If necessary replace filter element with new one.
[2] Filter elements ''A'', must be changed periodically to suit application, but at least every 6 months. Activated carbon filters must not operate in oil saturated conditions.
[3] Valid if ''S'' filter cartridge is installed upstream.

BF SERIES

WELDED CARBON STEEL COMPRESSED AIR FILTERS

operating pressure	**16** bar
volume flow rate	**1680** to **31400** Nm^3/h
connections	**3/8''** to **3''**
operating temp. range	**1,5** to **65** °C
standard colour	**RAL 5012**

APPLICATIONS

- general industrial applications
- automotive
- electronics
- food and beverage
- chemical
- petrochemical
- plastics
- paint

DESCRIPTION

BF welded filter housings have been developed for high efficient removal of solid particles, water, oil aerosols, hydrocarbons and odour vapours from large compressed air[(1)] systems. To meet the required compressed air quality appropriate filter element (B, P, R, M, S, A,) must be installed into filter housing.

[(1)] For any other technical gas please contact producer or your local distributor.

MDA60

page69

B; 15 µm

P; 3 µm

R; 1 µm

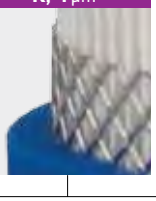

M; 0,1 µm

S; 0,01 µm

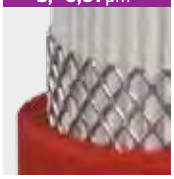

A; activated carbon

AOK 20B

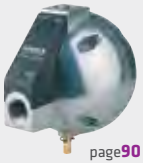

page90

TD16M

page88

CDI 16B

page84

ECD-B

page82

EMD12

page80

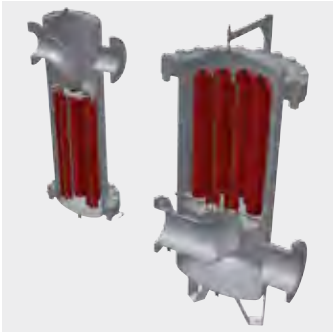

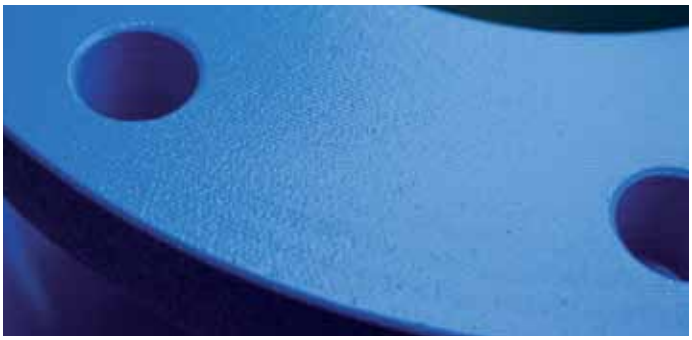

TECHNICAL DATA											FILTER ELEMENTS					
Filter housing size	**Pipe size**	**Max.oper. pressure**	**Flow rate** at 7 bar(g), 20 °C		**Dimensions** [mm]					**Mass**	**B** sintered 15 µm	**P** prefilter 3 µm	**R** prefilter 1 µm	**M** microfilter 0,1 µm	**S** microfilter 0,01 µm	**A** activated carbon
	DN	bar/psi	Nm³/h	scfm	A	B	C	D	E	kg						
BF 0240	80	16/232	1.680	989	1170	450	1645	219	177	61	1×76090 B15	1×76090 P	1×76090 R	1×76090 M	1×76090 S	1×76090 A
BF 0300	100	16/232	3.150	1.853	1340	560	1780	324	227	115	2×76090 B15	2×76090 P	2×76090 R	2×76090 M	2×76090 S	2×76090 A
BF 0450	125	16/232	4.700	2.765	1340	560	1780	324	227	123	3×76090 B15	3×76090 P	3×76090 R	3×76090 M	3×76090 S	3×76090 A
BF 0600	150	16/232	6.300	3.706	1425	620	1810	368	265	178	4×76090 B15	4×76090 P	4×76090 R	4×76090 M	4×76090 S	4×76090 A
BF 0900	150	16/232	9.400	5.530	1480	680	1850	419	650	218	6×76090 B15	6×76090 P	6×76090 R	6×76090 M	6×76090 S	6×76090 A
BF 1200	200	16/232	12.550	7.382	1835	792	510	508	-	320	8×76090 B15	8×76090 P	8×76090 R	8×76090 M	8×76090 S	8×76090 A
BF 1500	200	16/232	15.700	9.235	1880	918	535	610	-	455	10×76090 B15	10×76090 P	10×76090 R	10×76090 M	10×76090 S	10×76090 A
BF 1800	250	16/232	18.850	11.088	1950	955	555	610	-	500	12×76090 B15	12×76090 P	12×76090 R	12×76090 M	12×76090 S	12×76090 A
BF 2500	250	16/232	25.100	14.765	2060	1042	645	711	-	590	16×76090 B15	16×76090 P	16×76090 R	16×76090 M	16×76090 S	16×76090 A
BF 3000	300	16/232	31.400	18.481	2130	1085	680	711	-	684	20×76090 B15	20×76090 P	20×76090 R	20×76090 M	20×76090 S	20×76090 A

BF 0240
BF 0300
BF 0450
BF 0600
BF 0900

BF 1200
BF 1500
BF 1800
BF 2500
BF 3000

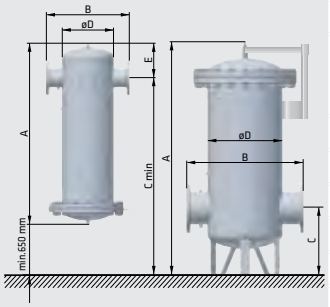

quality class - solids (ISO 8573-1)	7	6	3	2	1	1 [3]
residual oil content [mg/m³]	-	-	-	<0,1	<0,01	<0,005
quality class - oils (ISO 8573-1)	-	-	-	2	1	1
pressure drop - new element [mbar / psi]	20 / 0,290	10 / 0,145	20 / 0,290	50 / 0,725	80 / 1,160	60 / 0,870
change filter cartridge at pressure drop [mbar / psi]	[1]	350 / 5,07	350 / 5,07	350 / 5,07	350 / 5,07	6 months [2]
filter media	sintered brass	acrylic fibres, cellulose	borosilicate micro fibres			activated carbon
pleated version	-	✓	✓	✓	✓	-
wrapped version	-	-	-	-	-	✓
sintered version	✓	-	-	-	-	-
min. operating temperature (°C / °F)	1,5 / 35	1,5 / 35	1,5 / 35	1,5 / 35	1,5 / 35	1,5 / 35
max. operating temperature (°C / °F)	65 / 149	65 / 149	65 / 149	65 / 149	65 / 149	45 / 113

CORRECTION FACTORS

Operating pressure [bar]	2	3	4	5	6	7	8	9	10	11	12	13	14	15	16
Operating pressure [psi]	29	44	58	72	87	100	115	130	145	160	174	189	203	218	232
Correction factor	0,38	0,50	0,63	0,75	0,88	1	1,13	1,25	1,38	1,50	1,63	1,75	1,88	2,00	2,13

[1] B filter element can be cleared with ultrasonic bath or with back flushing. Intervals of cleaning depends of application. If necessary replace filter element with new one.
[2] Filter elements "A" must be changed periodically to suit application, but at least every 6 months. Activated carbon filters must not operate in oil saturated conditions.
[3] Valid if "S" filter cartridge is installed upstream.

WFIT SERIES

WELDED STAINLESS STEEL FILTERS - THREADED

operating pressure	**16 (12)** bar
volume flow rate	**75** to **3600** Nm³/h
connections	**1/4**" to **3**"
operating temp. range	up to **+150** °C
material	stainless steel 1.4301

Housing material 1.4404 on request.
Fluid group 1 on request.

APPLICATIONS

- biotechnology
- breweries
- chemical industry
- petrochemical industry
- dairies
- fermentation processes
- pharmaceutical industry
- hospitals

DESCRIPTION

WFIT welded stainless steel filter housings with threaded connections have been developed for filtration of compressed air as well as many other gasses where the risk for corrosion is very high or where stainless steel housing is required.

To meet the required gas quality appropriate filter element must be installed into filter housing.

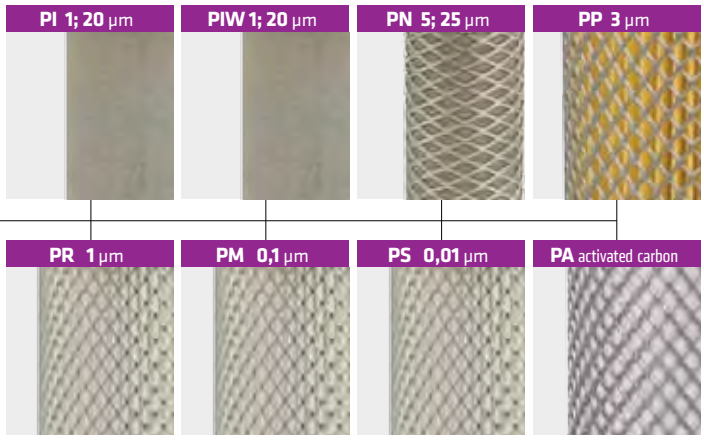

TECHNICAL DATA										FILTER ELEMENTS							
Filter housing size	Pipe size	Oper. press.	Flow rate at 7 bar(g), 20°C		Dimensions [mm]				Mass	**PI** prefilter 1; 20 µm	**PIW** prefilter 1; 20 µm	**PN** prefilter 5; 25 µm	**PP** prefilter 3 µm	**PR** prefilter 1 µm	**PM** microfilter 0,1 µm	**PS** microfilter 0,01 µm	**PA** activated carbon
	inch	bar	Nm³/h	scfm	A	B	C	D	kg								
WFIT 005	1/4"	16	75	44	202	116	76,1	1/2"	1,9	0310 PI	0310 PIW	0310 PN	0310 PP	0310 PR	0310 PM	0310 PS	0310 PA
WFIT 007	3/8"	16	105	62	232	120	76,1	1/2"	2,2	0410 PI	0410 PIW	0410 PN	0410 PP	0410 PR	0410 PM	0410 PS	0410 PA
WFIT 010	1/2"	16	150	88	230	125	76,1	1/2"	2,2	0420 PI	0420 PIW	0420 PN	0420 PP	0420 PR	0420 PM	0420 PS	0420 PA
WFIT 018	3/4"	16	225	132	254	125	76,1	1/2"	2,3	0520 PI	0520 PIW	0520 PN	0520 PP	0520 PR	0520 PM	0520 PS	0520 PA
WFIT 030	1"	16	315	185	275	136	88,9	1/2"	3,1	0525 PI	0525 PIW	0525 PN	0525 PP	0525 PR	0525 PM	0525 PS	0525 PA
WFIT 047	1 1/4"	16	420	247	337	155	88,9	1/2"	3,5	0725 PI	0725 PIW	0725 PN	0725 PP	0725 PR	0725 PM	0725 PS	0725 PA
WFIT 070	1 1/2"	16	600	353	386	180	114,3	1/2"	4,8	0730 PI	0730 PIW	0730 PN	0730 PP	0730 PR	0730 PM	0730 PS	0730 PA
WFIT 094	2"	16	900	530	457	180	114,3	1/2"	5,4	1030 PI	1030 PIW	1030 PN	1030 PP	1030 PR	1030 PM	1030 PS	1030 PA
WFIT 150	2"	16	1.260	742	583	180	114,3	1/2"	6,1	1530 PI	1530 PIW	1530 PN	1530 PP	1530 PR	1530 PM	1530 PS	1530 PA
WFIT 175	2 1/2"	16	1.680	989	740	224	139,7	1/2"	9,2	2030 PI	2030 PIW	2030 PN	2030 PP	2030 PR	2030 PM	2030 PS	2030 PA
WFIT 200	3"	12	2.400	1.413	1004	224	139,7	1/2"	11,5	3030 PI	3030 PIW	3030 PN	3030 PP	3030 PR	3030 PM	3030 PS	3030 PA
WFIT 240	3"	12	3.600	2.119	1029	252	168,3	1/2"	15,1	3050 PI	3050 PIW	3050 PN	3050 PP	3050 PR	3050 PM	3050 PS	3050 PA

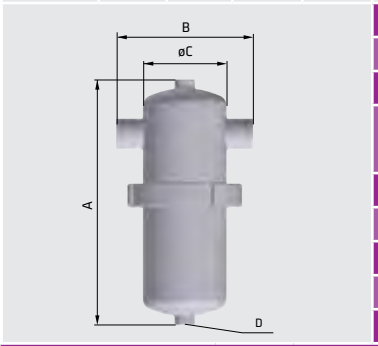

quality class - solids (ISO 8573-1)	-	-	-	6	3	2	1	1 [1]
quality class - oils (ISO 8573-1)	-	-	-	-	-	2	1	1
pressure drop - new element-dry [mbar]	≤2600; ≤60	≤2600; ≤60	10	10	20	50	80	60
filter media	sintered INOX 1.4404	sintered INOX 1.4404	stainless steel mesh 1.4301	acrylic fibres, cellulose	borosilicate micro fibres			borosilicate micro fibres, activ. carbon
pleated version	-	-	-	✓	✓	✓	✓	-
wrapped version	-	-	✓	-	-	-	-	✓
sintered version	✓	✓	-	-	-	-	-	-
min. operating temperature (°C / °F)	0 / 32	0 / 32	0 / 32	1,5 / 35	1,5 / 35	1,5 / 35	1,5 / 35	1,5 / 35
max. operating temperature (°C / °F)	150 / 302	150 / 302	150 / 302	65 / 149	120 / 248	120 / 248	120 / 248	45 / 113

CORRECTION FACTORS															
Operating pressure [bar]	2	3	4	5	6	7	8	9	10	11	12	13	14	15	16
Operating pressure [psi]	29	44	58	72	87	100	115	130	145	160	174	189	203	218	232
Correction factor	0,38	0,50	0,63	0,75	0,88	1	1,13	1,25	1,38	1,50	1,63	1,75	1,88	2,00	2,13

[1] Valid if "S" filter cartridge is installed upstream.

WHFIT SERIES

HIGH PRESS. STAINLESS STEEL PROCESS F.

operating pressure	**50** bar
volume flow rate	**150** to **2400** Nm^3/h
connections	**1/2**'' to **3**''
operating temp. range	up to **150** °C
material	stainless steel 1.4301

Housing material 1.4404 on request.
Fluid group 1 on request.

APPLICATIONS

- packing industry
- biotechnology
- breweries
- chemical industry
- dairies
- fermentation processes
- food and beverage industry
- pharmaceutical industry
- hospitals

DESCRIPTION

WHFIT process filter housings are designed for applications in process industry, where the risk for corrosion of compressed air[1] system components is very high. To meet the required compressed air quality[2] appropriate filter element must be installed into filter housing. HPF process filter housing can be used in variety of applications. For applications not listed please contact producer or your local distributor.

[1] For any other technical gas please contact producer or your local distributor.
[2] For oil removal, coalescing filter element must be installed and flow direction inside-out must be provided. General arrangement is filter head on top and filter bowl on bottom.

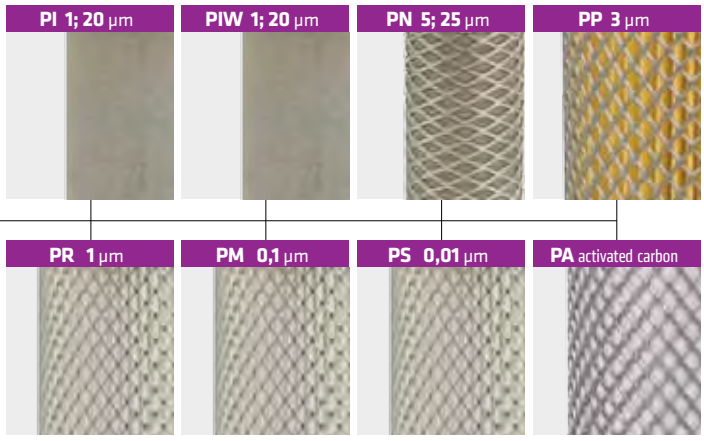

TECHNICAL DATA									FILTER ELEMENTS							
Filter housing size	Pipe size	Oper. press.	Flow rate at 7 bar(g), 20°C		Dimensions [mm]			Mass	**PI** prefilter 1; 20 µm	**PIW** prefilter 1; 20 µm	**PN** prefilter 5; 25 µm	**PP** prefilter 3 µm	**PR** prefilter 1 µm	**PM** microfilter 0,1 µm	**PS** microfilter 0,01 µm	**PA** activated carbon
	inch	bar	Nm³/h	scfm	A	B	C	kg								
WHFIT 010	1/2"	50	150	88	231	125	76,1	2,5	0420 PI	0420 PIW	0420 PN	0420 PP	0420 PR	0420 PM	0420 PS	0420 PA
WHFIT 018	3/4"	50	225	132	253	125	76,1	2,6	0520 PI	0520 PIW	0520 PN	0520 PP	0520 PR	0520 PM	0520 PS	0520 PA
WHFIT 030	1"	50	315	185	274	136	88,9	3,4	0525 PI	0525 PIW	0525 PN	0525 PP	0525 PR	0525 PM	0525 PS	0525 PA
WHFIT 047	1 1/4"	50	420	247	336	155	88,9	3,9	0725 PI	0725 PIW	0725 PN	0725 PP	0725 PR	0725 PM	0725 PS	0725 PA
WHFIT 070	1 1/2"	50	600	353	387	180	114,3	5,6	0730 PI	0730 PIW	0730 PN	0730 PP	0730 PR	0730 PM	0730 PS	0730 PA
WHFIT 094	2"	50	900	530	453	180	114,3	6,2	1030 PI	1030 PIW	1030 PN	1030 PP	1030 PR	1030 PM	1030 PS	1030 PA
WHFIT 150	2"	50	1260	742	580	180	114,3	6,9	1530 PI	1530 PIW	1530 PN	1530 PP	1530 PR	1530 PM	1530 PS	1530 PA
WHFIT 200	3"	50	2400	1413	1005	224	139,7	14,1	3030 PI	3030 PIW	3030 PN	3030 PP	3030 PR	3030 PM	3030 PS	3030 PA

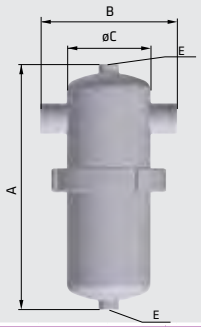

quality class - solids (ISO 8573-1)	-	-	-	6	3	2	1	1 [1]
quality class - oils (ISO 8573-1)	-	-	-	-	-	2	1	1
pressure drop - new elem.-dry [mbar / psi]	≤2600; ≤60	≤2600; ≤60	10	10	20	50	80	60
filter media	sintered INOX 1.4404	sintered INOX 1.4404	stainless steel mesh 1.4301	acrylic fibres, cellulose	borosilicate micro fibres			borosilicate micro fibres, activ. carbon
pleated version	-	-	-	✓	✓	✓	✓	-
wrapped version	-	-	✓	-	-	-	-	✓
sintered version	✓	✓	-	-	-	-	-	-
min. operating temperature (°C / °F)	0 / 32	0 / 32	0 / 32	1,5 / 35	1,5 / 35	1,5 / 35	1,5 / 35	1,5 / 35
max. operating temperature (°C / °F)	150 / 302	150 / 302	150 / 302	65 / 149	120 / 248	120 / 248	120 / 248	45 / 113

CORRECTION FACTORS					
Operating pressure [bar]	7	20	30	40	50
Operating pressure [psi]	100	290	435	580	725
Correction factor	1	2,63	3,88	5,13	6,38

[1] Valid if "S" filter cartridge is installed upstream.

WFIF SERIES

WELDED STAINLESS STEEL FILTERS - FLANGED

operating pressure	**16 (12, 10)** bar
volume flow rate	**150** to **21120** Nm^3/h
connections	**DN15** to **DN200**
operating temp. range	up to **150** °C
material	stainless steel 1.4301

Housing material 1.4404 on request.
Fluid group 1 on request.

APPLICATIONS

- biotechnology
- breweries
- chemical industry
- petrochemical industry
- dairies
- fermentation processes
- pharmaceutical industry
- hospitals

DESCRIPTION

WFIF welded stainless steel filter housings with flange connections have been developed for filtration of compressed air as well as many other gasses where the risk for corrosion is very high or where stainless steel housing is required.

To meet the required gas quality appropriate filter element must be installed into filter housing.

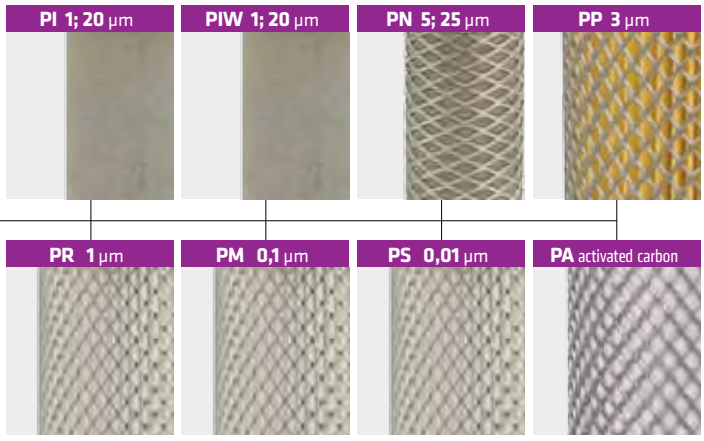

TECHNICAL DATA											FILTER ELEMENTS							
Filter housing size	Pipe size	Oper. press.	Flow rate at 7 bar(g), 20°C		Dimensions [mm]					Mass	**PI** prefilter 1; 20 µm	**PIW** prefilter 1; 20 µm	**PN** prefilter 5; 25 µm	**PP** prefilter 3 µm	**PR** prefilter 1 µm	**PM** microfilter 0,1 µm	**PS** microfilter 0,01 µm	**PA** activated carbon
	inch	bar	Nm³/h	scfm	A	B	B*	C	E	kg								
WFIF 010	DN15	16	150	88	230	195	-	76,1	1/2"	3,7	0420 PI	0420 PIW	0420 PN	0420 PP	0420 PR	0420 PM	0420 PS	0420 PA
WFIF 018	DN20	16	225	132	254	201	219	76,1	1/2"	4,5	0520 PI	0520 PIW	0520 PN	0520 PP	0520 PR	0520 PM	0520 PS	0520 PA
WFIF 030	DN25	16	315	185	275	216	244	88,9	1/2"	5,7	0525 PI	0525 PIW	0525 PN	0525 PP	0525 PR	0525 PM	0525-PS	0525 PA
WFIF 047	DN32	16	420	247	337	235	257	88,9	1/2"	7,3	0725 PI	0725 PIW	0725 PN	0725 PP	0725 PR	0725 PM	0725 PS	0725 PA
WFIF 070	DN40	16	600	353	386	260	290	114,3	1/2"	9,1	0730 PI	0730 PIW	0730 PN	0730 PP	0730 PR	0730 PM	0730 PS	0730 PA
WFIF 094	DN50	16	900	530	457	270	304	114,3	1/2"	10,4	1030 PI	1030 PIW	1030 PN	1030 PP	1030 PR	1030 PM	1030 PS	1030 PA
WFIF 150	DN50	16	1.260	742	583	270	304	114,3	1/2"	11,1	1530 PI	1530 PIW	1530 PN	1530 PP	1530 PR	1530 PM	1530 PS	1530-PA
WFIF 175	DN65	16	1.680	989	740	294	340	139,7	1/2"	14,2	2030 PI	2030 PIW	2030 PN	2030 PP	2030 PR	2030 PM	2030 PS	2030 PA
WFIF 200	DN80	12	2.400	1.413	1004	304	340	139,7	1/2"	19,3	3030 PI	3030 PIW	3030 PN	3030 PP	3030 PR	3030 PM	3030 PS	3030 PA
WFIF 240	DN80	12	3.600	2.119	1029	332	368	168,3	1/2"	22,9	3050 PI	3050 PIW	3050 PN	3050 PP	3050 PR	3050 PM	3050 PS	3050 PA
WFIF 450	DN100	10	5.040	2.966	986	410	-	219,1	1"	55	3x2030 PI	3x2030 PIW	3x2030 PN	3x2030 PP	3x2030 PR	3x2030 PM	3x2030 PS	3x2030 PA
WFIF 600	DN100	10	6.720	3.955	1240	410	-	219,1	1"	58	3x3030 PI	3x3030 PIW	3x3030 PN	3x3030 PP	3x3030 PR	3x3030 PM	3x3030 PS	3x3030 PA
WFIF 900	DN150	10	9.600	5.650	1311	480	-	273,0	1"	87	4x3030 PI	4x3030 PIW	4x3030 PN	4x3030 PP	4x3030 PR	4x3030 PM	4x3030 PS	4x3030 PA
WFIF 1200	DN150	10	13.440	7.910	1351	540	-	323,9	1"	108	6x3030 PI	6x3030 PIW	6x3030 PN	6x3030 PP	6x3030 PR	6x3030 PM	6x3030 PS	6x3030 PA
WFIF 1800	DN200	10	17.280	10.171	1496	660	-	406,4	1"	200	8x3030 PI	8x3030 PIW	8x3030 PN	8x3030 PP	8x3030 PR	8x3030 PM	8x3030 PS	8x3030 PA
WFIF 2000	DN200	10	21.120	12.431	1496	660	-	406,4	1"	200	10x3030 PI	10x3030 PIW	10x3030 PN	10x3030 PP	10x3030 PR	10x3030 PM	10x3030 PS	10x3030 PA

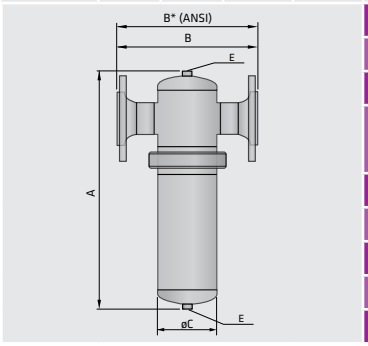

quality class - solids (ISO 8573-1)	-	-	-	6	3	2	1	1 [1]
quality class - oils (ISO 8573-1)	-	-	-	-	-	2	1	1
pressure drop - new element-dry [mbar]	≤2600; ≤60	≤2600; ≤60	10	10	20	50	80	60
filter media	sintered INOX 1.4404	sintered INOX 1.4404	stainless steel mesh 1.4301	acrylic fibres, cellulose	borosilicate micro fibres			borosilicate micro fibres, activ. carbon
pleated version	-	-	-	✓	✓	✓	✓	-
wrapped version	-	-	✓	-	-	-	-	✓
sintered version	✓	✓	-	-	-	-	-	-
min. operating temperature (°C / °F)	0 / 32	0 / 32	0 / 32	1,5 / 35	1,5 / 35	1,5 / 35	1,5 / 35	1,5 / 35
max. operating temperature (°C / °F)	150 / 302	150 / 302	150 / 302	65 / 149	120 / 248	120 / 248	120 / 248	45 / 113

CORRECTION FACTORS															
Operating pressure [bar]	2	3	4	5	6	7	8	9	10	11	12	13	14	15	16
Operating pressure [psi]	29	44	58	72	87	100	115	130	145	160	174	189	203	218	232
Correction factor	0,38	0,50	0,63	0,75	0,88	1	1,13	1,25	1,38	1,50	1,63	1,75	1,88	2,00	2,13

[1] Valid if "S" filter cartridge is installed upstream.
B = flange connection EN 1092-1/11 PN16
B* = flange connection ANSI B16.5 WN Cl 150

P-VAC SERIES

VACUUM PUMP PROTECTION FILTERS

operating pressure	**20** to **2000** mbar(abs)
volume flow rate	**7,5** to **345** Nm^3/h
connections	**3/8''** to **3''**
operating temp. range	**1,5** to **65** °C
standard colour	**RAL 5012**

APPLICATIONS

- vacuum pumps

DESCRIPTION

P-VAC filters are designed for protection of vacuum pumps. These filters are optimised for high-efficient removal of solid particles and other contamination from the suction side of vacuum pumps preventing damage to the pump.
For P-VAC filter series we offer two filtration stages. Rough prefilter "VACP" removes bulk liquid and large solid particles while high efficiency microfilter VACM removes very fine impurities which may damage the pump.

TECHNICAL DATA									FILTER ELEMENTS	
Filter model	Pipe size	Free air capacity at atmospheric pressure		Dimensions [mm]				Mass	VACP Prefilter	VACM Microfilter
	inch	Nm³/h	scfm	A	B	C	D	kg		
P-VAC 0056	3/8''	7,5	4,5	187	88	20	60	0,7	06050 VACP	06050 VACM
P-VAC 0076	1/2''	9,8	5,8	187	88	20	60	0,7	07050 VACP	07050 VACM
P-VAC 0106	3/4''	15,0	8,8	257	88	20	80	0,8	14050 VACP	14050 VACM
P-VAC 0186	1''	24,8	14,6	263	125	32	100	1,8	12075 VACP	12075 VACM
P-VAC 0306	1''	41,9	24,7	363	125	32	120	2,5	22075 VACP	22075 VACM
P-VAC 0476	1 1/2''	63,8	37,6	461	125	32	140	2,5	32075 VACP	32075 VACM
P-VAC 0706	1 1/2''	97,5	57,4	640	125	32	160	3,2	50075 VACP	50075 VACM
P-VAC 0946	2''	125	73,6	684	163	43	520	5,1	51090 VACP	51090 VACM
P-VAC 1506	2''	187	110,4	935	163	43	770	7,1	76090 VACP	76090 VACM
P-VAC 1756	2 1/2''	210	123,6	935	163	43	770	6,9	76090 VACP	76090 VACM
P-VAC 2006	3''	270	158,9	795	240	59	630	12,9	51140 VACP	51140 VACM
P-VAC 2406	3''	345	203	1000	240	59	780	14,0	75140 VACP	75140 VACM

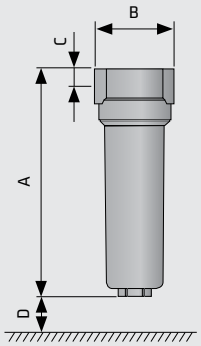

pressure drop - new element-dry [mbar / psi]	10 / 0,15	30 / 0,45
filter media	acrilyc fibres, cellulose	borosilicate micro fibres
min. operating temperature (°C / °F)	1,5 / 35	1,5 / 35
max. operating temperature (°C / °F)	65 / 149	65 / 149

CORRECTION FACTORS												
Absolute pressure [bar]	1	0,9	0,8	0,7	0,6	0,5	0,4	0,3	0,2	0,1	0,05	0,02
Absolute pressure [psi]	14,7	13	11,6	10,2	8,7	7,3	5,8	3,3	2,9	1,45	0,73	0,29
Correction factor	1	0,9	0,8	0,7	0,6	0,5	0,4	0,3	0,2	0,1	0,05	0,02

• To calculate the correct capacity of a given filter based on actual operating conditions, multiply the nominal flow capacity by the appropriate correction factor.

M-VAC SERIES

MEDICAL VACUUM FILTERS

operating pressure	**20** to **2000** mbar(abs)
volume flow rate	**7,5** to **787** Nm^3/h
connections	**3/8''** to **DN150**
operating temp. range	**1,5** to **65** °C
standard colour	**RAL 9003**

APPLICATIONS

- operating theatres
- maternity units
- dental applications
- pathology laboratories
- pharmaceutical applications
- mortuary and post-mortem rooms

DESCRIPTION

M-VAC filters are designed for medical vacuum applications. They are optimised for high-efficient removal of bacterial and other contamination (solids and liquids) from the suction side of vacuum pumps preventing damage to the pump and the potential biological infection of the surrounding environment. Removed liquids are collected in a transparent flask which can be removed for sterilisation.

The efficiency of the installed filter elements exceeds the 0,005% penetration specified in HTM 2022 for infectious disease units, when tested in accordance with BS 3928.

TECHNICAL DATA								FILTER ELEMENTS
Filter model	Pipe size	Free air capacity at atmospheric pressure		Dimensions [mm]			Mass	VAC
	inch	Nm³/h	scfm	A	B	D	kg	
M-VAC 0056	3/8''	7,5	4	187	88	60	0,7	06050
M-VAC 0076	1/2''	9,8	6	187	88	60	0,7	07050
M-VAC 0106	3/4''	15,0	9	257	88	80	0,8	14050
M-VAC 0186	1''	24,8	15	263	125	100	1,8	12075
M-VAC 0306	1''	41,9	25	363	125	120	2,5	22075
M-VAC 0476	1 1/2''	63,8	38	461	125	140	2,5	32075
M-VAC 0706	1 1/2''	97,5	57	640	125	160	3,2	50075
M-VAC 0946	2''	125	74	684	163	520	5,1	51090
M-VAC 1506	2''	187,5	110	935	163	770	7,1	76090
M-VAC 1756	2 1/2''	210	124	935	163	770	6,9	76090
M-VAC 2006	3''	270	159	795	240	630	12,9	51140
M-VAC 2406	3''	345	203	1000	240	780	14	75140
M-VAC B240	DN80	275	162	1170	450	650	61	1x 76090
M-VAC B300	DN100	394	232	1340	560	650	115	2x 76090
M-VAC B450	DN125	587	345	1340	560	650	123	3x 76090
M-VAC B600	DN150	787	463	1425	620	650	178	4x 76090
				pressure drop - new element-dry [mbar / psi]				30 / 0,45
				filter media				borosilicate micro fibes
				min. operating temperature (°C / °F)				1,5 / 35
				max. operating temperature (°C / °F)				65 / 149

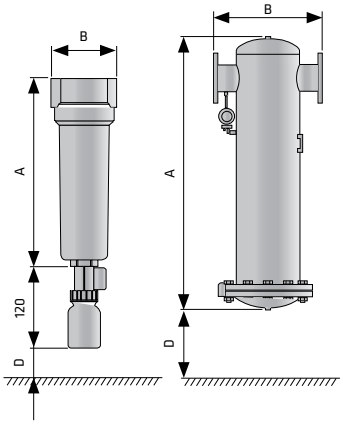

CORRECTION FACTORS												
Absolute pressure [bar]	1	0,9	0,8	0,7	0,6	0,5	0,4	0,3	0,2	0,1	0,05	0,02
Absolute pressure [psi]	14,7	13	11,6	10,2	8,7	7,3	5,8	3,3	2,9	1,45	0,73	0,29
Correction factor	1	0,9	0,8	0,7	0,6	0,5	0,4	0,3	0,2	0,1	0,05	0,02

• To calculate the correct capacity of a given filter based on actual operating conditions, multiply the nominal flow capacity by the appropriate correction factor.

AFs SERIES

SILICONE FREE FILTERS

operating pressure	**16** bar
volume flow rate	**60** to **2760** Nm^3/h
connections	**3/8"** to **3"**
operating temp. range	**1,5** to **65** °C
standard colour	**RAL 3020**

APPLICATIONS

- painting
- automotive industry

DESCRIPTION

AFs filters are designed for applications in paint industry. Quantity of substances that could cause impairments in paint wetting applications or cause defects in paint work have been reduced to a minimum.
To meet the required compressed air quality appropriate "paint compatible" filter element must be installed into filter housing.

TECHNICAL DATA									FILTER ELEMENTS	
Filter model	Pipe size	Flow rate at 7 bar(g), 20 °C		Dimensions [mm]				Mass	Ms Microfilter 0,1 µm	Ss Microfilter 0,01 µm
	inch	Nm³/h	scfm	A	B	C	D	kg		
AFs 0056	3/8''	60	35	187	88	20	60	0,7	06050 Ms	06050 Ss
AFs 0076	1/2''	75	46	187	88	20	60	0,7	07050 Ms	07050 Ss
AFs 0106	3/4''	120	70	257	88	20	80	0,8	14050 Ms	14050 Ss
AFs 0186	1''	198	116	263	125	32	100	1,8	12075 Ms	12075 Ss
AFs 0306	1''	335	197	363	125	32	120	2,5	22075 Ms	22075 Ss
AFs 0476	1 1/2''	510	300	461	125	32	140	2,5	32075 Ms	32075 Ss
AFs 0706	1 1/2''	780	459	640	125	32	160	3,2	50075 Ms	50075 Ss
AFs 0946	2''	1000	588	684	163	43	520	5,1	51090 Ms	51090 Ss
AFs 1506	2''	1500	882	935	163	43	770	7,1	76090 Ms	76090 Ss
AFs 1756	2 1/2''	1680	990	935	163	43	770	6,9	76090 Ms	76090 Ss
AFs 2006	3''	2160	1270	795	240	59	630	12,9	51140 Ms	51140 Ss
AFs 2406	3''	2760	1620	1000	240	59	780	14,0	75140 Ms	75140 Ss

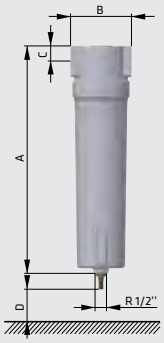

	Ms	Ss
quality class - solids (ISO 8573-1)	2	1
quality class - oils (ISO 8573-1)	2	1
residual oil content	<0,1 mg/m³	<0,01 mg/m³
pressure drop - new element-dry [mbar / psi]	50/0,725	80 / 1,160
pressure drop - new element-wet [mbar / psi]	120/1,74	190 / 2,756
change filter element at pressure drop [mbar / psi]	350 mbar	350 mbar
filter media	borosilicate micro fibes	borosilicate micro fibes
pleated version	✓	✓
wrapped version	-	-
sintered version	-	-
min. operating temperature (°C / °F)	1,5 / 35	1,5 / 35
max. operating temperature (°C / °F)	65 / 149	65 / 149

CORRECTION FACTORS															
Operating pressure [bar]	2	3	4	5	6	7	8	9	10	11	12	13	14	15	16
Operating pressure [psi]	29	44	58	72	87	100	115	130	145	160	174	189	203	218	232
Correction factor	0,38	0,50	0,63	0,75	0,88	1	1,13	1,25	1,38	1,50	1,63	1,75	1,88	2,00	2,13

HF SERIES

CAST ALUMINIUM HIGH PRESSURE FILTERS

operating pressure	**50** bar
volume flow rate	**71** to **2760** Nm^3/h
connections	**1/2**'' to **3**''
operating temp. range	**1,5** to **65** °C
standard colour	**RAL 7040**

APPLICATIONS

- general industrial applications
- automotive
- electronics
- food and beverage
- chemical
- petrochemical
- PET
- paint

DESCRIPTION

HF filter housings have been developed for high efficient removal of solid particles, water, oil aerosols, hydrocarbons and other vapours from compressed air[1] systems.
To meet the required compressed air quality appropriate filter element (B, P, R, M, S, A) must be installed into filter housing.

[1] For any other technical gas please contact producer or your local distributor.

MDH50

page73

B; 15 µm

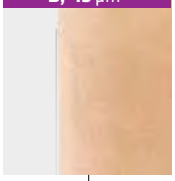

P; 3 µm

R; 1 µm

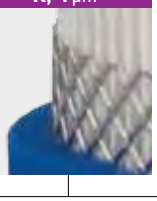

M; 0,1 µm

S; 0,01 µm

A; activated carbon

TD50M

page88

Drain valve

EMD HP

page87

AOK 50B

page92

TECHNICAL DATA										FILTER ELEMENTS					
Filter housing size	Pipe size	Max. oper. pressure	Flow rate at 7 bar(g), 20 °C		Dimensions [mm]				Mass	B sintered 15 µm	P prefilter 3 µm	R prefilter 1 µm	M microfilter 0,1 µm	S microfilter 0,01 µm	A activated carbon
	inch	bar/psi	Nm³/h	scfm	A	B	C	D	kg						
HF 007	1/2''	50/725	71	42	250	110	30	80	2,1	HF 6060 B	HF 6060 P	HF 6060 R	HF 6060 M	HF 6060 S	HF 6060 A
HF 010	3/4''	50/725	112	66	250	110	30	90	2,1	HF 7060 B	HF 7060 P	HF 7060 R	HF 7060 M	HF 7060 S	HF 7060 A
HF 018	1''	50/725	204	120	250	110	30	140	2,1	HF 12060 B	HF 12060 P	HF 12060 R	HF 12060 M	HF 12060 S	HF 12060 A
HF 047	1 1/2''	50/725	282	166	535	160	45	260	9,5	HF 22090 B	HF 22090 P	HF 22090 R	HF 22090 M	HF 22090 S	HF 22090 A
HF 070	1 1/2''	50/725	400	235	535	160	45	360	9,5	HF 32090 B	HF 32090 P	HF 32090 R	HF 32090 M	HF 32090 S	HF 32090 A
HF 094	2''	50/725	494	291	715	160	45	540	12,2	HF 50090 B	HF 50090 P	HF 50090 R	HF 50090 M	HF 50090 S	HF 50090 A
HF 150	2''	50/725	799	470	715	160	45	550	12,2	HF 51090 B	HF 51090 P	HF 51090 R	HF 51090 M	HF 51090 S	HF 51090 A
HF 200	3''	50/725	2160	1270	862	198	70	620	30,4	HF 51140 B	HF 51140 P	HF 51140 R	HF 51140 M	HF 51140 S	HF 51140 A
HF 240	3''	50/725	2760	1620	1010	198	70	780	34,9	HF 75140 B	HF 75140 P	HF 75140 R	HF 75140 M	HF 75140 S	HF 75140 A

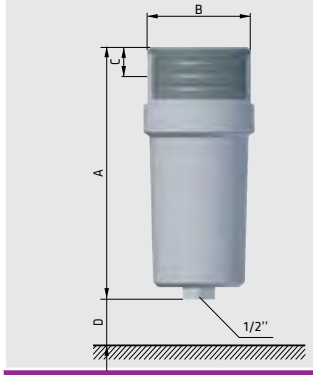

quality class - solids (ISO 8573-1)	7	6	3	2	1	1 [3]
residual oil content [mg/m³]	-	-	-	<0,1	<0,01	<0,005
quality class - oils (ISO 8573-1)	-	-	-	2	1	1
pressure drop - new element [mbar / psi]	20 / 0,29	10 / 0,145	20 / 0,29	50 / 0,725	80 / 1,16	60 / 0,87
change filter cartridge at pressure drop [mbar / psi]	[1]	350 / 5,07	350 / 5,07	350 / 5,07	350 / 5,07	6 months [2]
filter media	sintered brass	acrylic fibres, cellulose	borosilicate micro fibres			activated carbon
pleated version	-	✓	✓	✓	✓	-
wrapped version	-	-	-	-	-	✓
sintered version	✓	-	-	-	-	-
min. operating temperature (°C / °F)	1,5 / 35	1,5 / 35	1,5 / 35	1,5 / 35	1,5 / 35	1,5 / 35
max. operating temperature (°C / °F)	65 / 149	65 / 149	65 / 149	65 / 149	65 / 149	45 / 113

CORRECTION FACTORS										
Operating pressure [bar]	3	5	7	10	13	16	20	30	40	50
Operating pressure [psi]	44	72	100	145	189	232	290	435	580	725
Correction factor	0,50	0,75	1	1,38	1,75	2,13	2,63	3,88	5,13	6,38

[1] B filter element can be cleaned with ultrasonic bath or with back flushing. Intervals of cleaning depends of application. If necessary replace filter element with new one.
[2] Filter elements ''A,'', must be changed periodically to suit application, but at least every 6 months. Activated carbon filters must not operate in oil saturated conditions.
[3] Valid if ''S'' filter cartridge is installed upstream.

AHP SERIES

ALUMINIUM HIGH PRESSURE FILTERS

operating pressure	**64** bar
volume flow rate	**30** to **720** Nm³/h
connections	**3/8**'' to **2**''
operating temp. range	**1,5** to **65** °C
surface protection	anodisation

APPLICATIONS

- general industrial applications
- automotive
- electronics
- food and beverage
- chemical
- petrochemical
- plastics
- paint

DESCRIPTION

AHP aluminium high pressure filters are designeg for high efficient removal of solid particles, water, oil aerosols, hydrocarbons and other vapours from compressed air[1] systems. To meet the required compressed air quality appropriate filter element (B, P, R, M, S, A) must be installed into filter housing.

[1] For any other technical gas please contact producer or your local distributor.

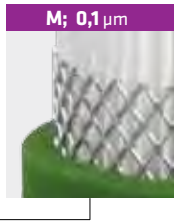

page88

TECHNICAL DATA									FILTER ELEMENTS					
Filter housing size	**Pipe size**	**Max. oper. pressure**	**Flow rate** at 7 bar(g), 20 °C		**Dimensions** [mm]			**Mass**	**B** sintered 15 µm	**P** prefilter 3 µm	**R** prefilter 1 µm	**M** microfilter 0,1 µm	**S** microfilter 0,01 µm	**A** activated carbon
	inch	bar/psi	Nm³/h	scfm	A	B	C	kg						
AHP 005	3/8''	64/928	30	17,6	167	104	90	2,25	AHP 6050 B	AHP 6050 P	AHP 6050 R	AHP 6050 M	AHP 6050 S	AHP 6050 A
AHP 007	1/2''	64/928	60	35,3	167	104	90	2,25	AHP 7050 B	AHP 7050 P	AHP 7050 R	AHP 7050 M	AHP 7050 S	AHP 7050 A
AHP 010	3/4''	64/928	120	70,6	232	104	90	2,84	AHP 14050 B	AHP 14050 P	AHP 14050 R	AHP 14050 M	AHP 14050 S	AHP 14050 A
AHP 018	1''	64/928	180	106	258	150	120	6,45	AHP 12075 B	AHP 12075 P	AHP 12075 R	AHP 12075 M	AHP 12075 S	AHP 12075 A
AHP 030	1 1/4''	64/928	270	159	358	150	120	7,8	AHP 22075 B	AHP 22075 P	AHP 22075 R	AHP 22075 M	AHP 22075 S	AHP 22075 A
AHP 047	1 1/2''	64/928	360	212	458	150	120	9,17	AHP 32075 B	AHP 32075 P	AHP 32075 R	AHP 32075 M	AHP 32075 S	AHP 32075 A
AHP 094	2''	64/928	720	423	665	170	120	16,5	AHP 51090 B	AHP 51090 P	AHP 51090 R	AHP 51090 M	AHP 51090 S	AHP 51090 A

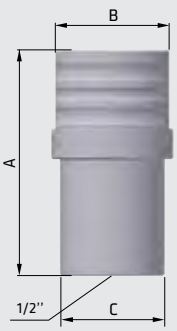

quality class - solids (ISO 8573-1)	7	6	3	2	1	1 [3]
residual oil content [mg/m³]	-	-	-	<0,1	<0,01	<0,005
quality class - oils (ISO 8573-1)	-	-	-	2	1	1
pressure drop - new element [mbar / psi]	20 / 0,29	10 / 0,145	20 / 0,29	50 / 0,725	80 / 1,16	60 / 0,87
change filter cartridge at pressure drop [mbar / psi]	[1]	350 / 5,07	350 / 5,07	350 / 5,07	350 / 5,07	6 months [2]
filter media	sintered brass	acrylic fibres, cellulose	borosilicate micro fibres			activated carbon
pleated version	-	✓	✓	✓	✓	-
wrapped version	-	-	-	-	-	✓
sintered version	✓	-	-	-	-	-
min. operating temperature (°C / °F)	1,5 / 35	1,5 / 35	1,5 / 35	1,5 / 35	1,5 / 35	1,5 / 35
max. operating temperature (°C / °F)	65 / 149	65 / 149	65 / 149	65 / 149	65 / 149	45 / 113

CORRECTION FACTORS												
Operating pressure [bar]	3	5	7	10	13	16	20	30	40	50	60	64
Operating pressure [psi]	44	72	100	145	189	232	290	435	580	725	870	928
Correction factor	0,50	0,75	1	1,38	1,75	2,13	2,63	3,88	5,13	6,38	7,63	8,13

[1] B filter element can be cleaned with ultrasonic bath or with back flushing. Intervals of cleaning depends of application. If necessary replace filter element with new one.
[2] Filter elements ''A'', must be changed periodically to suit application, but at least every 6 months. Activated carbon filters must not operate in oil saturated conditions.
[3] Valid if ''S'' filter cartridge is installed upstream.

CHP SERIES

CARBON STEEL HIGH PRESSURE FILTERS

operating pressure	**100, 250, 400** bar
volume flow rate	**40** to **715** Nm^3/h
connections	**1/4''** to **2''**
operating temp. range	**1,5** to **65** °C
surface protection	Nickel plated 25 µm

APPLICATIONS

- general industrial applications
- automotive
- electronics
- food and beverage
- chemical
- petrochemical
- plastics
- paint

DESCRIPTION

CHP carbon steel high pressure filters have been developed for high efficient removal of solid particles, water, oil aerosols, hydrocarbons and other vapours from compressed air systems.

To meet the required compressed air quality appropriate filter element (B, P, R, M, S, A) must be installed into filter housing.

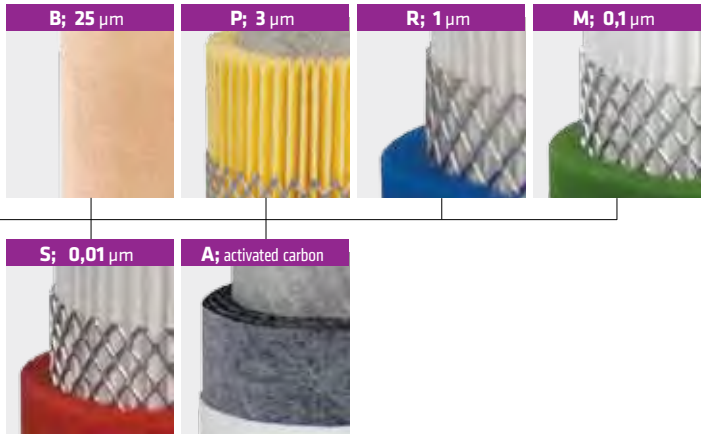

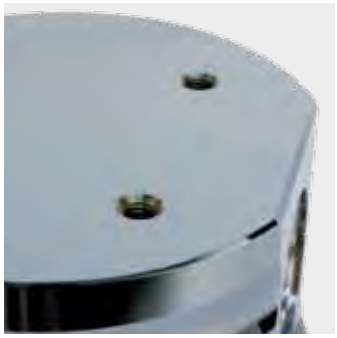

TECHNICAL DATA									FILTER ELEMENTS					
Filter housing size	Pipe size	Max. oper. pressure	Flow rate at 7 bar(g), 20 °C		Dimensions [mm]			Mass	**B** sintered 25 µm	**P** prefilter 3 µm	**R** prefilter 1 µm	**M** microfilter 0,1 µm	**S** microfilter 0,01 µm	**A** activated carbon
	inch	bar/psi	Nm³/h	scfm	A	B	C	kg						
CHP 003	1/4''	100/250/400	40	23,5	165	83,5	70	4,6	CHP 0305 B	CHP 0305 P	CHP 0305 R	CHP 0305 M	CHP 0305 S	CHP 0305 A
CHP 005	3/8''	100/250/400	70	41,2	165	83,5	70	4,6	CHP 0310 B	CHP 0310 P	CHP 0310 R	CHP 0310 M	CHP 0310 S	CHP 0310 A
CHP 007	1/2''	100/250/400	130	76,5	210	105	85	8,7	CHP 0420 B	CHP 0420 P	CHP 0420 R	CHP 0420 M	CHP 0420 S	CHP 0420 A
CHP 010	3/4''	100/250/400	195	115	210	105	85	9,3	CHP 0520 B	CHP 0520 P	CHP 0520 R	CHP 0520 M	CHP 0520 S	CHP 0520 A
CHP 018	1''	100/250/400	275	162	253	119	100	14,8	CHP 0525 B	CHP 0525 P	CHP 0525 R	CHP 0525 M	CHP 0525 S	CHP 0525 A
CHP 030	1 1/4''	100/250/400	380	223	303	119	100	16	CHP 0725 B	CHP 0725 P	CHP 0725 R	CHP 0725 M	CHP 0725 S	CHP 0725 A
CHP 047	1 1/2''	100/250/400	495	291	329	146	130	26,5	CHP 0730 B	CHP 0730 P	CHP 0730 R	CHP 0730 M	CHP 0730 S	CHP 0730 A
CHP 094	2''	100/250/400	715	421	415	182	150	49	CHP 1030 B	CHP 1030 P	CHP 1030 R	CHP 1030 M	CHP 1030 S	CHP 1030 A

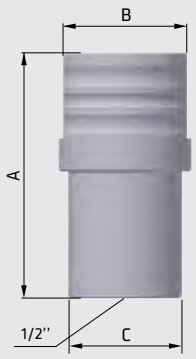

quality class - solids (ISO 8573-1)	8	6	3	2	1	1 [3]
residual oil content [mg/m³]	-	-	-	<0,1	<0,01	<0,005
quality class - oils (ISO 8573-1)	-	-	-	2	1	1
pressure drop - new element [mbar / psi]	20 / 0,29	10 / 0,145	20 / 0,29	50 / 0,725	80 / 1,16	60 / 0,87
change filter cartridge at pressure drop [mbar / psi]	[1]	350 / 5,07	350 / 5,07	350 / 5,07	350 / 5,07	6 months [2]
filter media	sintered brass	acrylic fibres, cellulose	borosilicate micro fibres			activated carbon
pleated version	-	✓	✓	✓	✓	-
wrapped version	-	-	-	-	-	✓
sintered version	✓	-	-	-	-	-
min. operating temperature (°C / °F)	1,5 / 35	1,5 / 35	1,5 / 35	1,5 / 35	1,5 / 35	1,5 / 35
max. operating temperature (°C / °F)	65 / 149	65 / 149	65 / 149	65 / 149	65 / 149	45 / 113

CORRECTION FACTORS							
Operating pressure [bar]	7	25	40	64	100	250	400
Operating pressure [psi]	100	362	580	928	1450	3625	5800
Correction factor	1	3	5	8	12	12	12

[1] B filter element can be cleaned with ultrasonic bath or with back flushing. Intervals of cleaning depends of application. If necessary replace filter element with new one.
[2] Filter elements ''A'', must be changed periodically to suit application, but at least every 6 months. Activated carbon filters must not operate in oil saturated conditions.
[3] Valid if ''S'' filter cartridge is installed upstream.

IHP SERIES

STAINLESS STEEL HIGH PRESSURE FILTERS

operating pressure	**100, 250, 400** bar
volume flow rate	**40** to **715** Nm^3/h
connections	**1/4''** to **2''**
operating temp. range	**1,5** to **65** °C
material	stainless steel 1.4301

APPLICATIONS

- general industrial applications
- automotive
- electronics
- food and beverage
- chemical
- petrochemical
- plastics
- paint

DESCRIPTION

IHP stainless steel high pressure filters are designed for high efficient removal of solid particles, water, oil aerosols, hydrocarbons and other vapours from compressed air systems.
To meet the required compressed air quality appropriate filter element (n5, n25, M, S, A) must be installed into filter housing.

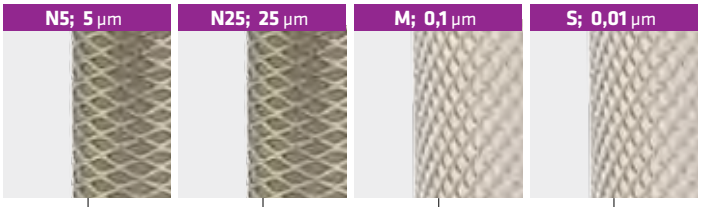

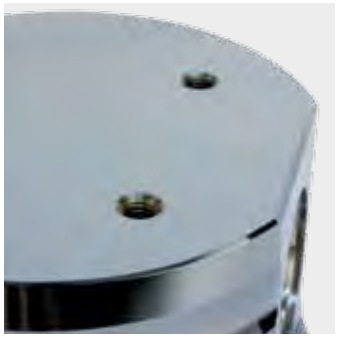
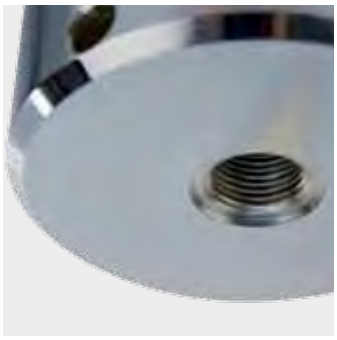

TECHNICAL DATA									FILTER ELEMENTS					
Filter housing size	**Pipe size**	**Max. oper. pressure**	**Flow rate** at 7 bar(g), 20 °C		**Dimensions** [mm]			**Mass**	**N5** 5 µm	**N25** 25 µm	**M** microfilter 0,1 µm	**S** microfilter 0,01 µm	**A** activated carbon	**CKL-IHP**
	inch	bar/psi	Nm^3/h	scfm	A	B	C	kg						
IHP 003	1/4''	100/250/400	40	23,5	165	83,5	70	4,6	IHP 0305 N5	IHP 0305 N25	IHP 0305 M	IHP 0305 S	IHP 0305 A	CKL-IHP 0305
IHP 005	3/8''	100/250/400	70	41,2	165	83,5	70	4,6	IHP 0310 N5	IHP 0310 N25	IHP 0310 M	IHP 0310 S	IHP 0310 A	CKL-IHP 0310
IHP 007	1/2''	100/250/400	130	76,5	210	105	85	8,7	IHP 0420 N5	IHP 0420 N25	IHP 0420 M	IHP 0420 S	IHP 0420 A	CKL-IHP 0420
IHP 010	3/4''	100/250/400	195	115	210	105	85	9,3	IHP 0520 N5	IHP 0520 N25	IHP 0520 M	IHP 0520 S	IHP 0520 A	CKL-IHP 0520
IHP 018	1''	100/250/400	275	162	253	119	100	11,6	IHP 0525 N5	IHP 0525 N25	IHP 0525 M	IHP 0525 S	IHP 0525 A	CKL-IHP 0525
IHP 030	1 1/4''	100/250/400	380	223	303	119	100	16	IHP 0725 N5	IHP 0725 N25	IHP 0725 M	IHP 0725 S	IHP 0725 A	CKL-IHP 0725
IHP 047	1 1/2''	100/250/400	495	291	329	146	130	26,5	IHP 0730 N5	IHP 0730 N25	IHP 0730 M	IHP 0730 S	IHP 0730 A	CKL-IHP 0730
IHP 094	2''	100/250/400	715	421	415	182	150	49	IHP 1030 N5	IHP 1030 N25	IHP 1030 M	IHP 1030 S	IHP 1030 A	CKL-IHP 1030
									quality class - solids (ISO 8573-1)		-	-	2	1	1 [2]	-
									residual oil content [mg/m^3]		-	-	<0,1	<0,01	<0,005	-
									quality class - oils (ISO 8573-1)		-	-	2	1	1	-
									pressure drop - new element [mbar / psi]		10 / 0,15	10 / 0,15	50 / 0,725	80 / 1,16	60 / 0,87	-
									change filter cartridge at pressure drop [mbar / psi]		-	-	350 / 5,07	350 / 5,07	6 months [1]	-
									filter media		stainless steel mesh 1.4301	stainless steel mesh 1.4301	borosilicate micro fibres		activated carbon	-
									pleated version		-	-	✓	✓	-	-
									wrapped version		✓	✓	-	-	✓	-
									sintered version		-	-	-	-	-	-
									min. operating temperature (°C / °F)		1,5 / 35	1,5 / 35	1,5 / 35	1,5 / 35	1,5 / 35	1,5 / 35
									max. operating temperature (°C / °F)		65 / 149	65 / 149	65 / 149	65 / 149	45 / 113	65 / 149

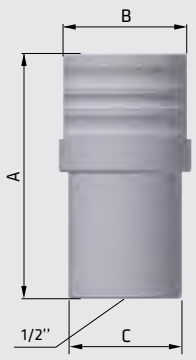

CORRECTION FACTORS							
Operating pressure [bar]	7	25	40	64	100	250	400
Operating pressure [psi]	100	362	580	928	1450	3625	5800
Correction factor	1	3	5	8	12	12	12

[1] Filter elements ''A,'', must be changed periodically to suit application, but at least every 6 months. Activated carbon filters must not operate in oil saturated conditions.
[2] Valid if ''S'' filter cartridge is installed upstream.

PF SERIES

STAINLESS STEEL PROCESS FILTERS

operating pressure	**16** bar **(12, 10)**
volume flow rate	**75** to **21120** Nm³/h
connections	**1/4''** to **DN200**
operating temp. range	up to **150** °C
material	stainless steel 1.4301

Housing material 1.4404 on request.
Fluid group 1 on request.

APPLICATIONS

- packing industry
- biotechnology
- breweries
- chemical industry
- dairies
- fermentation processes
- food and beverage industry
- pharmaceutical industry
- hospitals

DESCRIPTION

PF process filter housings are designed for applications in process industry, where the risk for corrosion of compressed air[1] system components is very high. To meet the required compressed air quality[2] appropriate filter element must be installed into filter housing.
PF process filter housing can be used in variety of applications. For applications not listed please contact producer or your local distributor.
[1]For any other technical gas please contact producer or your local distributor.
[2]For oil removal, coalescing filter element must be installed and flow direction inside-out must be provided. General arrangement is filter head on top and filter bowl on bottom.

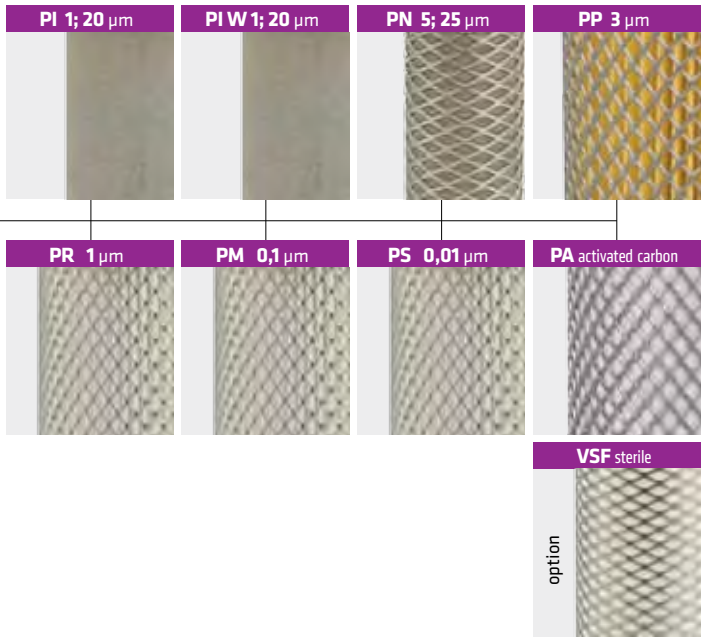

TECHNICAL DATA										FILTER ELEMENTS							
Filter housing size	Pipe size	Oper. press.	Flow rate at 7 bar(g), 20°C		Dimensions [mm]				Mass	**PI** prefilter 1; 20 µm	**PIW** prefilter 1; 20 µm	**PN** prefilter 5; 25 µm	**PP** prefilter 3 µm	**PR** prefilter 1 µm	**PM** microfilter 0,1 µm	**PS** microfilter 0,01 µm	**PA** activated carbon
	inch	bar	Nm³/h	scfm	A	B	C	D	kg								
PF 005	1/4''	16	75	44	202	116	76,1	1/4''	1,7	0310 PI	0310 PIW	0310 PN	0310 PP	0310 PR	0310 PM	0310 PS	0310 PA
PF 007	3/8''	16	105	62	232	120	76,1	1/4''	1,9	0410 PI	0410 PIW	0410 PN	0410 PP	0410 PR	0410 PM	0410 PS	0410 PA
PF 010	1/2''	16	150	88	230	125	76,1	1/4''	1,9	0420 PI	0420 PIW	0420 PN	0420 PP	0420 PR	0420 PM	0420 PS	0420 PA
PF 018	3/4''	16	225	132	254	125	76,1	1/4''	2,0	0520 PI	0520 PIW	0520 PN	0520 PP	0520 PR	0520 PM	0520 PS	0520 PA
PF 030	1''	16	315	185	275	136	88,9	1/4''	2,6	0525 PI	0525 PIW	0525 PN	0525 PP	0525 PR	0525 PM	0525 PS	0525 PA
PF 047	1 1/4''	16	420	247	337	155	88,9	1/4''	3,0	0725 PI	0725 PIW	0725 PN	0725 PP	0725 PR	0725 PM	0725 PS	0725 PA
PF 070	1 1/2''	16	600	353	386	180	114,3	1/4''	4,3	0730 PI	0730 PIW	0730 PN	0730 PP	0730 PR	0730 PM	0730 PS	0730 PA
PF 094	2''	16	900	530	457	180	114,3	1/4''	4,8	1030 PI	1030 PIW	1030 PN	1030 PP	1030 PR	1030 PM	1030 PS	1030 PA
PF 150	2''	16	1.260	742	583	180	114,3	1/4''	5,3	1530 PI	1530 PIW	1530 PN	1530 PP	1530 PR	1530 PM	1530 PS	1530 PA
PF 175	2 1/2''	16	1.680	989	740	224	139,7	1/4''	9,0	2030 PI	2030 PIW	2030 PN	2030 PP	2030 PR	2030 PM	2030 PS	2030 PA
PF 200	3''	12	2.400	1.413	1004	224	139,7	1/4''	10,8	3030 PI	3030 PIW	3030 PN	3030 PP	3030 PR	3030 PM	3030 PS	3030 PA
PF 240	3''	12	3.600	2.119	1029	252	168,3	1/4''	16,2	3050 PI	3050 PIW	3050 PN	3050 PP	3050 PR	3050 PM	3050 PS	3050 PA
PF 450	DN100	10	5.040	2.966	986	410	219,1	1''	45	3x2030 PI	3x2030 PIW	3x2030 PN	3x2030 PP	3x2030 PR	3x2030 PM	3x2030 PS	3x2030 PA
PF 600	DN100	10	6.720	3.955	1240	410	219,1	1''	46	3x3030 PI	3x3030 PIW	3x3030 PN	3x3030 PP	3x3030 PR	3x3030 PM	3x3030 PS	3x3030 PA
PF 900	DN150	10	9.600	5.650	1311	480	273,0	1''	70	4x3030 PI	4x3030 PIW	4x3030 PN	4x3030 PP	4x3030 PR	4x3030 PM	4x3030 PS	4x3030 PA
PF 1200	DN150	10	13.440	7.910	1351	540	323,9	1''	80	6x3030 PI	6x3030 PIW	6x3030 PN	6x3030 PP	6x3030 PR	6x3030 PM	6x3030 PS	6x3030 PA
PF 1800	DN200	10	17.280	10.171	1496	660	406,4	1''	135	8x3030 PI	8x3030 PIW	8x3030 PN	8x3030 PP	8x3030 PR	8x3030 PM	8x3030 PS	8x3030 PA
PF 2000	DN200	10	21.120	12.431	1496	660	406,4	1''	135	10x3030 PI	10x3030 PIW	10x3030 PN	10x3030 PP	10x3030 PR	10x3030 PM	10x3030 PS	10x3030 PA

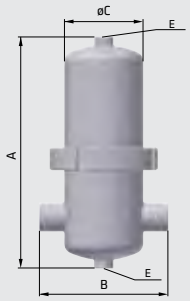

quality class - solids (ISO 8573-1)	-	-	-	6	3	2	1	1 [1)]
quality class - oils (ISO 8573-1)	-	-	-	-	-	2	1	1
pressure drop - new element-dry [mbar]	≤2600; ≤60	≤2600; ≤60	10	10	20	50	80	60
filter media	sintered INOX 1.4404	sintered INOX 1.4404	stainless steel mesh 1.4301	acrylic fibres, cellulose	borosilicate micro fibres			borosilicate micro fibres, activ. carbon
pleated version	-	-	-	✓	✓	✓	✓	-
wrapped version	-	-	✓	-	-	-	-	✓
sintered version	✓	✓	-	-	-	-	-	-
min. operating temperature (°C / °F)	0 / 32	0 / 32	0 / 32	1,5 / 35	1,5 / 35	1,5 / 35	1,5 / 35	1,5 / 35
max. operating temperature (°C / °F)	150 / 302	150 / 302	150 / 302	65 / 149	120 / 248	120 / 248	120 / 248	45 / 113

CORRECTION FACTORS															
Operating pressure [bar]	2	3	4	5	6	7	8	9	10	11	12	13	14	15	16
Operating pressure [psi]	29	44	58	72	87	100	115	130	145	160	174	189	203	218	232
Correction factor	0,38	0,50	0,63	0,75	0,88	1	1,13	1,25	1,38	1,50	1,63	1,75	1,88	2,00	2,13

[1)] Valid if "S" filter cartridge is installed upstream.

HPF SERIES HIGH PRESS. STAINLESS STEEL PROCESS FILTERS

operating pressure	**50** bar
volume flow rate	**150** to **2400** Nm^3/h
connections	**1/2**'' to **3**''
operating temp. range	up to **150** °C
material	stainless steel 1.4301

Housing material 1.4404 on request.
Fluid group 1 on request.

APPLICATIONS

- packing industry
- biotechnology
- breweries
- chemical industry
- dairies
- fermentation processes
- food and beverage industry
- pharmaceutical industry
- hospitals

DESCRIPTION

HPF process filter housings are designed for applications in process industry, where the risk for corrosion of compressed air[1] system components is very high. To meet the required compressed air quality[2] appropriate filter element must be installed into filter housing. HPF process filter housing can be used in variety of applications. For applications not listed please contact producer or your local distributor.

[1] For any other technical gas please contact producer or your local distributor.
[2] For oil removal, coalescing filter element must be installed and flow direction inside-out must be provided. General arrangement is filter head on top and filter bowl on bottom.

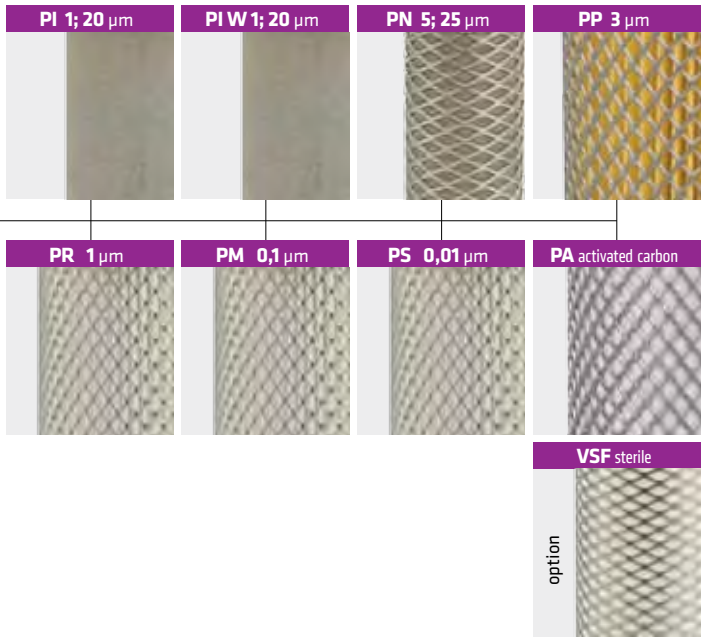

TECHNICAL DATA									FILTER ELEMENTS							
Filter housing size	Pipe size	Oper. press.	Flow rate at 7 bar(g), 20°C		Dimensions [mm]			Mass	**PI** prefilter 1; 20 µm	**PIW** prefilter 1; 20 µm	**PN** prefilter 5; 25 µm	**PP** prefilter 3 µm	**PR** prefilter 1 µm	**PM** microfilter 0,1 µm	**PS** microfilter 0,01 µm	**PA** activated carbon
	inch	bar	Nm³/h	scfm	A	B	C	kg								
HPF 010/50	1/2''	50	150	88	231	125	76,1	2,5	0420 PI	0420 PIW	0420 PN	0420 PP	0420 PR	0420 PM	0420 PS	0420 PA
HPF 018/50	3/4''	50	225	132	253	125	76,1	2,6	0520 PI	0520 PIW	0520 PN	0520 PP	0520 PR	0520 PM	0520 PS	0520 PA
HPF 030/50	1''	50	315	185	274	136	88,9	3,4	0525 PI	0525 PIW	0525 PN	0525 PP	0525 PR	0525 PM	0525 PS	0525 PA
HPF 047/50	1 1/4''	50	420	247	336	155	88,9	3,9	0725 PI	0725 PIW	0725 PN	0725 PP	0725 PR	0725 PM	0725 PS	0725 PA
HPF 070/50	1 1/2''	50	600	353	387	180	114,3	5,6	0730 PI	0730 PIW	0730 PN	0730 PP	0730 PR	0730 PM	0730 PS	0730 PA
HPF 094/50	2''	50	900	530	453	180	114,3	6,2	1030 PI	1030 PIW	1030 PN	1030 PP	1030 PR	1030 PM	1030 PS	1030 PA
HPF 150/50	2''	50	1260	742	580	180	114,3	6,9	1530 PI	1530 PIW	1530 PN	1530 PP	1530 PR	1530 PM	1530 PS	1530 PA
HPF 200/50	3''	50	2400	1413	1005	224	139,7	14,1	1030 PI	3030 PIW	3030 PN	3030 PP	3030 PR	3030 PM	3030 PS	3030 PA

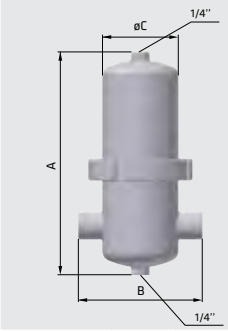

quality class - solids (ISO 8573-1)	-	-	-	6	3	2	1	1 [1]
quality class - oils (ISO 8573-1)	-	-	-	-	-	2	1	1
pressure drop - new element-dry [mbar]	≤2600; ≤60	≤2600; ≤60	10	10	20	50	80	60
filter media	sintered INOX 1.4404	sintered INOX 1.4404	stainless steel mesh 1.4301	acrylic fibres, cellulose	borosilicate micro fibres			borosilicate micro fibres, activ. carbon
pleated version	-	-	-	✓	✓	✓	✓	-
wrapped version	-	-	✓	-	-	-	-	✓
sintered version	✓	✓	-	-	-	-	-	-
min. operating temperature (°C / °F)	0 / 32	0 / 32	0 / 32	1,5 / 35	1,5 / 35	1,5 / 35	1,5 / 35	1,5 / 35
max. operating temperature (°C / °F)	150 / 302	150 / 302	150 / 302	65 / 149	120 / 248	120 / 248	120 / 248	45 / 113

CORRECTION FACTORS					
Operating pressure [bar]	7	20	30	40	50
Operating pressure [psi]	100	290	435	580	725
Correction factor	1	2,63	3,88	5,13	6,38

[1] Valid if "S" filter cartridge is installed upstream.

SF SERIES

STAINLESS STEEL STERILE FILTERS

operating pressure	**16 (10)** bar
volume flow rate	**75** to **21120** Nm^3/h
connections	**DN10** to **DN50 TC ISO** **DN100** to **DN200 EN**
operating temp. range	**-20** °C to **+150** °C
material	stainless steel 1.4301

Housing material 1.4404 on request.
Fluid group 1 on request.

APPLICATIONS

- packing industry
- biotechnology
- breweries
- chemical industry
- dairies
- fermentation processes
- food and beverage industry
- pharmaceutical industry
- hospitals

DESCRIPTION

SF stainless steel sterile filter housings have been specifically developed for removing of impurities from compressed air[1] system. To meet the required compressed air quality appropriate filter element must be installed into filter housing. SF filter housing is also designed for sterilisation.

SF process filter housing can be used in variety of applications. For applications not listed above please contact producer or your local distributor.
[1] For any other technical gas please contact producer or your local distributor.

ADVANTAGES

- ✓ High-efficient sterile filtration of compressed air, process air and technical gasses.
- ✓ High-efficient removal of sub-micron particles down to 0,01µm including microorganisms (bacteria).
- ✓ Housing material on request 1.4404
- ✓ Polished surface of filter housing down to grade Ra0,8.
- ✓ Filter element with exceptional strength assuring high-efficient filtration and allowing large number of sterilization cycles.
- ✓ 100% integrity tested (DOP test)
- ✓ All components meet the FDA requirements for contact with food in accordance with the Code of Federal Regulations (CFR), title 21.

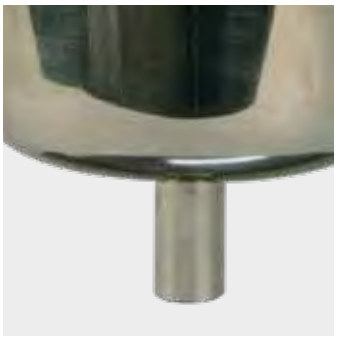

TECHNICAL DATA											FILTER ELEMENTS
Filter housing size	Pipe size	Max. oper. pressure	Flow rate at 7 bar(g), 20 °C		Dimensions [mm]					Mass	VSF sterile 0,01 µm
	inch	bar/psi	Nm³/h	scfm	A	B	C	D	E	kg	
SF 006	DN10 / ø17,2	16/232	75	44	218	125	76,1	69	1/8''	1,6	1 x 0310 VSF
SF 009	DN10 / ø17,2	16/232	105	62	246	125	76,1	69	1/8''	1,7	1 x 0410 VSF
SF012	DN15 / ø21,3	16/232	150	88	251	120	76,1	69	1/8''	1,7	1 x 0420 VSF
SF 018	DN15 / ø21,3	16/232	225	132	275	120	76,1	69	1/8''	1,8	1 x 0520 VSF
SF 032	DN25 / ø35,7	16/232	315	185	303	169	114,3	86	1/4''	3,1	1 x 0530 VSF
SF 048	DN32 / ø42,4	16/232	600	353	363	169	114,3	86	1/4''	3,4	1 x 0730 VSF
SF 072	DN40 / ø48,3	16/232	900	530	446	169	114,3	86	1/4''	3,6	1 x 1030 VSF
SF 108	DN50 / ø60,3	16/232	1.260	742	587	183	114,3	96	1/4''	4,9	1 x 1530 VSF
SF 144	DN65 / ø76,1	16/232	1.680	989	763	195	139,7	120	1/4''	8,4	1 x 2030 VSF
SF 192	DN80 / ø88,9	16/232	2.400	1.413	1015	195	139,7	120	1/4''	10,2	1 x 3030 VSF
SF 432	DN100	10/145	5.040	2.966	1012	410	219,1	183	1/2''	44	3 x 2030 VSF
SF 576	DN100	10/145	6.720	3.955	1266	410	219,1	183	1/2''	45	3 x 3030 VSF
SF 768	DN150	10/145	9.600	5.650	1305	480	273	225	1/2''	70	4 x 3030 VSF
SF 1152	DN150	10/145	13.440	7.910	1418	540	323,9	256	1''	80	6 x 3030 VSF
SF 1536	DN200	10/145	17.200	10.124	1568	660	406,4	306	1''	135	8 x 3030 VSF
SF 1920	DN200	10/145	21.120	12.431	1568	660	406,4	306	1''	135	10 x 3030 VSF

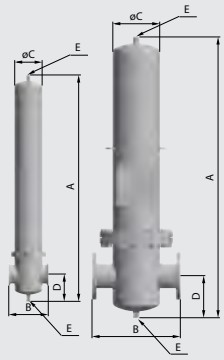

quality class - solids (ISO 8573-1)	1
quality class - oils (ISO 8573-1)	-
pressure drop - new element (dry) [mbar / psi]	80/1,160
pressure drop - new element (wet) [mbar / psi]	190/2,756
filter media	Borosilicate micro fibres
pleated version	-
wrapped version	✓
sintered version	-
min. operating temperature (°C / °F)	-20 / -4
max. operating temperature (°C / °F)	150 / 302

CORRECTION FACTORS															
Operating pressure [bar]	2	3	4	5	6	7	8	9	10	11	12	13	14	15	16
Operating pressure [psi]	29	44	58	72	87	100	115	130	145	160	174	189	203	218	232
Correction factor	0,38	0,50	0,63	0,75	0,88	1	1,13	1,25	1,38	1,50	1,63	1,75	1,88	2,00	2,13

SPF SERIES

STAINLESS STEEL STERILE FILTERS

operating pressure	**16 (12)** bar
volume flow rate	**75** to **3600** Nm³/h
connections	**1/4**" to **3**"
operating temp. range	up to **+150** °C
material	stainless steel 1.4301

Housing material 1.4404 on request.
Fluid group 1 on request.

APPLICATIONS

- packing industry
- biotechnology
- breweries
- chemical industry
- dairies
- fermentation processes
- food and beverage industry
- pharmaceutical industry
- hospitals

DESCRIPTION

SPF stainless steel sterile filter housings are specially designed for for applications in process industry, where the risk for corrosion of compressed air[1] system components is very high. To meet the required compressed air quality appropriate filter element (sterile filter cartridge) must be installed into filter housing. SPF process filter housing can be used in variety of applications.

For applications not listed please contact producer or your local distributor. For oil removal, coalescing filter element must be installed and flow direction inside-out must be provided. General arrangement is filter head on top and filter bowl on bottom.

[1] For any other technical gas please contact producer or your local distributor.

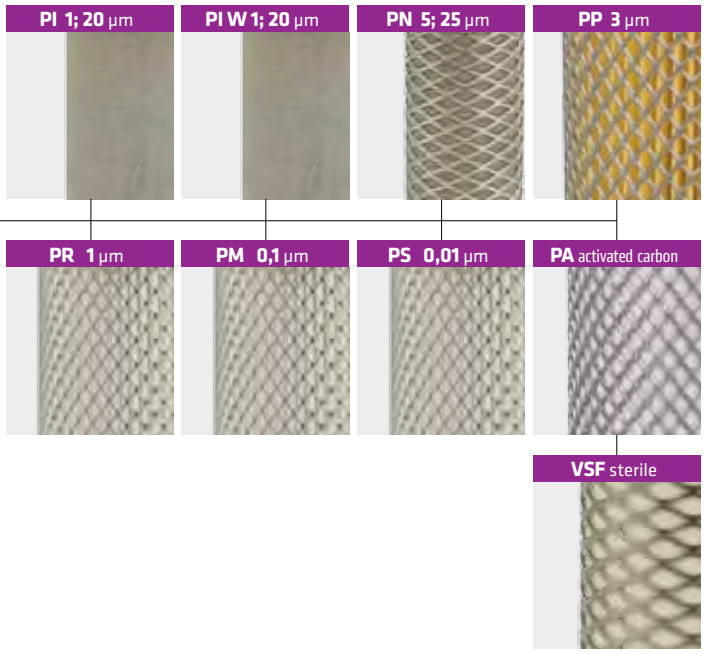

TECHNICAL DATA										FILTER ELEMENTS								
Filter housing size	**Pipe size**	**Oper. press.**	**Flow rate** at 7 bar(g), 20 °C		DImensions [mm]				**Mass**	**PI** prefilter 1; 20 µm	**PIW** prefilter 1; 20 µm	**PN** prefilter 5; 25 µm	**PP** prefilter 3 µm	**PR** prefilter 1 µm	**PM** microfilter 0,1 µm	**PS** microfilter 0,01 µm	**PA** activated carbon	**VSF** sterile 0,01 µm
	inch	bar	Nm³/h	scfm	A	B	C	E	kg									
SPF 005	1/4''	16	75	44	225	116	76,1	1/8''	1,7	0310 PI	0310 PIW	0310 PN	0310 PP	0310 PR	0310 PM	0310 PS	0310 PA	0310 VSF
SPF 007	3/8''	16	105	62	251	120	76,1	1/8''	1,9	0410 PI	0410 PIW	0410 PN	0410 PP	0410 PR	0410 PM	0410 PS	0410 PA	0410 VSF
SPF 010	1/2''	16	150	88	253	125	76,1	1/8''	1,9	0420 PI	0420 PIW	0420 PN	0420 PP	0420 PR	0420 PM	0420 PS	0420 PA	0420 VSF
SPF 018	3/4''	16	225	132	281	125	76,1	1/8''	2,0	0520 PI	0520 PIW	0520 PN	0520 PP	0520 PR	0520 PM	0520 PS	0520 PA	0520 VSF
SPF 030	1''	16	315	185	290	136	88,9	1/8''	2,6	0525 PI	0525 PIW	0525 PN	0525 PP	0525 PR	0525 PM	0525 PS	0525 PA	0525 VSF
SPF 047	1 1/4''	16	420	247	357	155	88,9	1/8''	3,0	0725 PI	0725 PIW	0725 PN	0725 PP	0725 PR	0725 PM	0725 PS	0725 PA	0725 VSF
SPF 070	1 1/2''	16	600	353	408	179	114,3	1/4''	4,3	0730 PI	0730 PIW	0730 PN	0730 PP	0730 PR	0730 PM	0730-PS	0730 PA	0730 VSF
SPF 094	2''	16	900	530	476	179	114,3	1/4''	4,8	1030 PI	1030 PIW	1030 PN	1030 PP	1030 PR	1030 PM	1030 PS	1030 PA	1030 VSF
SPF 150	2''	16	1260	742	602	180	114,3	1/4''	5,3	1530 PI	1530 PIW	1530 PN	1530 PP	1530 PR	1530 PM	1530 PS	1530 PA	1530 VSF
SPF 175	2 1/2''	16	1680	989	762	224	139,7	1/4''	9,0	2030 PI	2030 PIW	2030 PN	2030 PP	2030 PR	2030 PM	2030 PS	2030 PA	2030 VSF
SPF 200	3''	12	2400	1413	1030	224	139,7	1/4''	10,8	3030 PI	3030 PIW	3030 PN	3030 PP	3030 PR	3030 PM	3030 PS	3030 PA	3030 VSF
SPF 240	3''	12	3600	2119	1035	238	154	1/4''	16,2	3050 PI	3050 PIW	3050 PN	3050 PP	3050 PR	3050 PM	3050 PS	3050 PA	3050 VSF

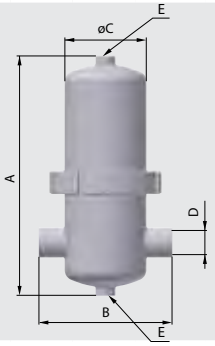

quality class - solids (ISO 8573-1)	-	-	-	6	3	2	1	1 [1)]	1
quality class - oils (ISO 8573-1)	-	-	-	-	-	2	1	1	-
pressure drop - new element-dry [mbar]	≤2600; ≤60	≤2600; ≤60	10	10	20	50	80	60	80
filter media	sintered stainless steel 1.4404	sintered stainless steel 1.4404	stainless steel mesh 1.4301	acrylic fibres, cellulose	borosilicate micro fibres			borosilicate micro fibres, activ. carbon	borosilicate micro fibres
pleated version	-	-	-	✓	✓	✓	✓	-	-
wrapped version	-	-	✓	-	-	-	-	✓	✓
sintered version	✓	✓	-	-	-	-	-	-	-
min. operating temperature (°C / °F)	0 / 32	0 / 32	0 / 32	1,5 / 35	1,5 / 35	1,5 / 35	1,5 / 35	1,5 / 35	-20 / -4
max. operating temperature (°C / °F)	150 / 302	150 / 302	150 / 302	65 / 149	120 / 248	120 / 248	120 / 248	45 / 113	150 / 302

CORRECTION FACTORS															
Operating pressure [bar]	2	3	4	5	6	7	8	9	10	11	12	13	14	15	16
Operating pressure [psi]	29	44	58	72	87	100	115	130	145	160	174	189	203	218	232
Correction factor	0,38	0,50	0,63	0,75	0,88	1	1,13	1,25	1,38	1,50	1,63	1,75	1,88	2,00	2,13

[1)] Valid if "S" filter cartridge is installed upstream.

AV SERIES

STAINLESS STEEL AIR VENTING FILTERS

volume flow rate	**9** to **310** Nm³/h
connections	**DN32** to **DN80**
operating temp. range	up to **+200** °C
material	stainless steel 1.4301

- material: stainless steel 1.4301; on request 1.4404.
- TRI-CLAMP connection on request.

APPLICATIONS

- packing industry
- biotechnology
- breweries
- chemical industry
- dairies
- fermentation processes
- food & beverage industry
- pharmaceutical industry
- water treatment systems

DESCRIPTION

AV stainless steel filter housings are designed to remove impurities from air which is being feed or exhausted from tank during changing of liquid level.

To meet the required air quality appropriate filter element (typically AVF filtration grade) must be installed into filter housing.

AV filter housing is also designed for sterilisation. Before use, if needed for the application, sterilize the filters.

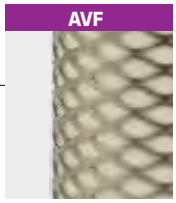

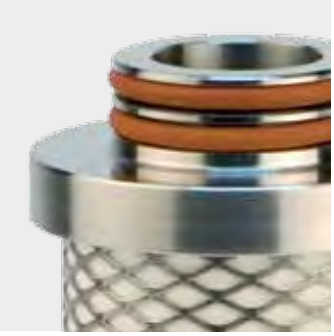

Filter housing model	Connection DIN 11851*	Flow rate	Dimensions [mm]			Mass	Filter element type
	DN	Nm^3/h	A	ø B	C	kg	
AV 006	32	9	115	88,9	Rd 58 x 1/6	1,6	0310 AVF
AV 027	40	25	176	114,3	Rd 65 x 1/6	2,4	0525 AVF
AV 032	50	40	184	114,3	Rd 78 x 1/6	2,5	0530 AVF
AV 072	50	110	320	114,3	Rd 78 x 1/6	3,4	1030 AVF
AV 144	80	210	123	168,3	Rd 110 x 1/4	9,5	2030 AVF
AV 192	80	310	820	168,3	Rd 110 x 1/4	12,0	3030 AVF

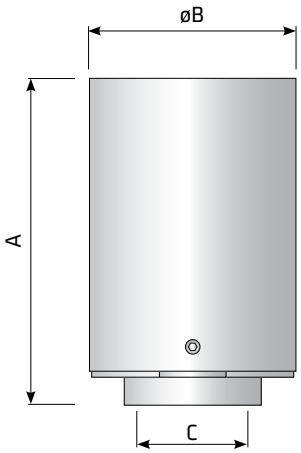

Condensate separators

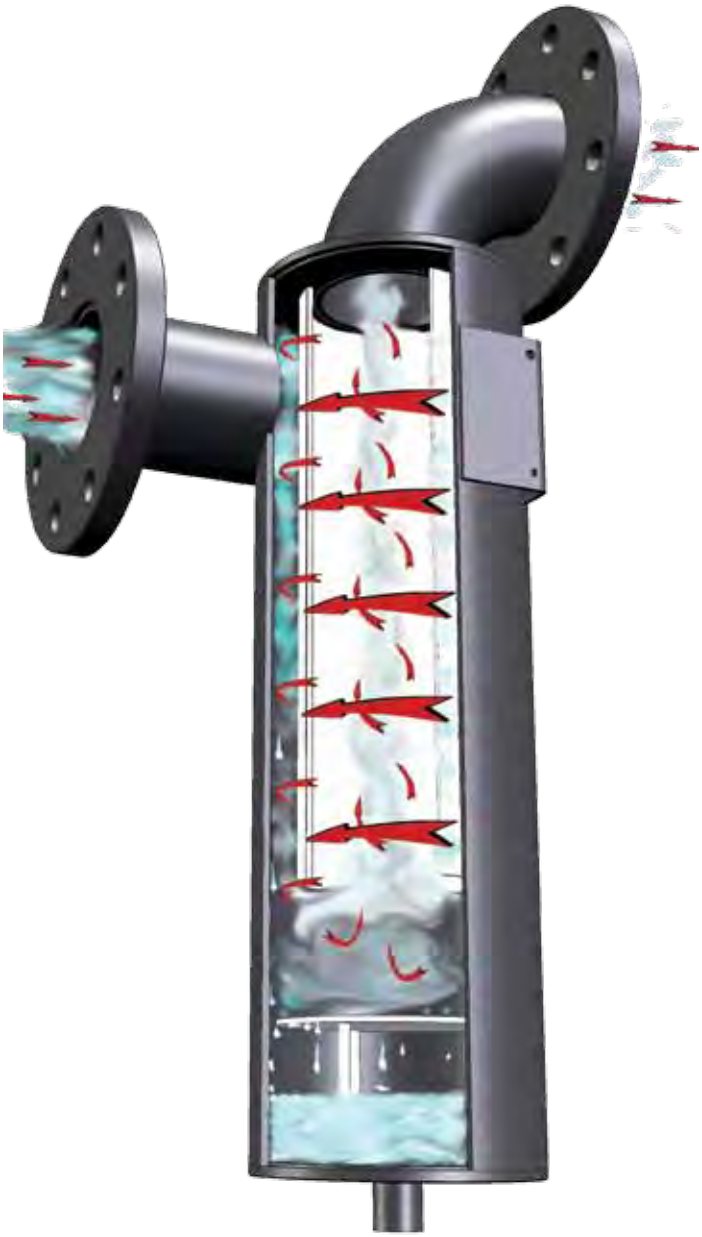

CKL-B SERIES

ALUMINIUM CONDENSATE SEPARATORS

operating pressure	**16** bar
volume flow rate	**120** to **2850** Nm^3/h
connections	**3/8''** to **3''**
operating temp. range	**1,5** to **65** °C
standard colour	**RAL 9005**

APPLICATIONS

- automotive
- electronics
- food and beverage
- chemical
- petrochemical
- plastics
- paint
- general industrial applications

DESCRIPTION

CKL-B condensate separators are designed for high efficient removal of bulk liquids from compressed air and vacuum systems. Inside the housing there is an insert with vanes that creates controlled rotation of the air.

As a result of centrifugal action liquids (water, oil) and large particles are forced to the housing wall, slowed down and accumulated at the bottom of separator housing as condensate. The turbulent free zone in the lower part of the filter housing prevents condensate from being picked up and "carried over" into the airstream.

To discharge condensate from the CKL-B cyclone separator it is essential to install automatic or electronic condensate drain.

SG

page77

AOK 16B

page93

AOK 20B

page90

TD16M

page88

CDI 16B

page84

ECD-B

page82

EMD12

page80

TECHNICAL DATA

Model	Pipe size	Max.oper. pressure	Flow rate at 7 bar(g), 20 °C		Temperature oper. range		Dimensions [mm]				Mass
	DN	bar/psi	Nm³/h	SCFM	°C	°F	A	B	C	D	kg
CKL 005 B	3/8	16/232	120	70	1,5 - 65	35 - 149	187	88	20	60	0,7
CKL 007 B	1/2	16/232	155	91	1,5 - 65	35 - 149	187	88	20	60	0,7
CKL 010 B	3/4	16/232	235	138	1,5 - 65	35 - 149	257	88	20	80	0,8
CKL 018 B	1	16/232	365	215	1,5 - 65	35 - 149	263	125	32	100	1,8
CKL 047 B	1 1/2	16/232	770	452	1,5 - 65	35 - 149	461	125	32	140	2,5
CKL 094 B	2	16/232	1280	753	1,5 - 65	35 - 149	684	163	43	520	5,1
CKL 150 B	2 1/2	16/232	2460	1447	1,5 - 65	35 - 149	684	163	43	520	5,1
CKL 200 B	3	16/232	2850	1677	1,5 - 65	35 - 149	795	240	59	630	12,9

quality class - solids (ISO 8573-1)	-
quality class - water (ISO 8573-1)	8
quality class - oils (ISO 8573-1)	-
efficiency	>98%

CORRECTION FACTORS

Operating pressure [bar]	2	3	4	5	6	7	8	9	10	11	12	13	14	15	16
Operating pressure [psi]	29	44	58	72	87	100	115	130	145	160	174	189	203	218	232
Correction factor	0,38	0,50	0,63	0,75	0,88	1	1,13	1,25	1,38	1,50	1,63	1,75	1,88	2,00	2,13

CKL-C SERIES

ALUMINIUM CONDENSATE SEPARATORS

operating pressure	**20** bar
volume flow rate	**72** to **2760** Nm³/h
connections	**3/8''** to **3''**
operating temp. range	**1,5** to **65** °C
standard colour	**RAL 9005**

APPLICATIONS

- general industrial applications
- automotive
- electronics
- food and beverage
- chemical
- petrochemical
- plastics
- paint

DESCRIPTION

CKL-C condensate separators are designed for high efficient removal of bulk liquids from compressed air and vacuum systems up to 20 bar. Inside the housing there is an insert with vanes that creates controlled rotation of the air.

As a result of centrifugal action liquids (water, oil) and large particles are forced to the housing wall, slowed down and accumulated at the bottom of separator housing as condensate. The turbulent free zone in the lower part of the filter housing prevents condensate from being picked up and "carried over" into the airstream.

To discharge condensate from the CKL-C cyclone separator it is essential to install automatic or electronic condensate drain.

AOK 20B

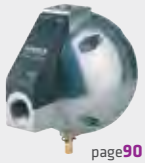

page90

TD25M

page88

TECHNICAL DATA

Filter housing size	Pipe size	Max. oper. pressure	Flow rate at 7 bar(g), 20 °C		Dimensions [mm]				Mass
	inch	bar/psi	Nm³/h	scfm	A	B	C	D	kg
CKL-C 20	3/8''	20/290	72	42	187	88	20	80	0,7
CKL-C 21	1/2''	20/290	96	56	256	88	20	80	0,8
CKL-C 30	1/2''	20/290	150	88	278	106	25	100	1,3
CKL-C 31	3/4''	20/290	216	127	278	106	25	100	1,3
CKL-C 40	1''	20/290	282	166	252	125	32	120	2,1
CKL-C 43	1 1/2''	20/290	510	300	450	125	32	160	3,2
CKL-C 50	2''	20/290	888	522	605	160	43	180	5,1
CKL-C 52	2 1/2''	20/290	1440	847	685	160	43	200	6,3
CKL-C 61	3''	20/290	2760	1624	800	240	60	300	12,9
					quality class - solids (ISO 8573-1)				-
					quality class - water (ISO 8573-1)				8
					quality class - oils (ISO 8573-1)				-
					efficiency				>98%

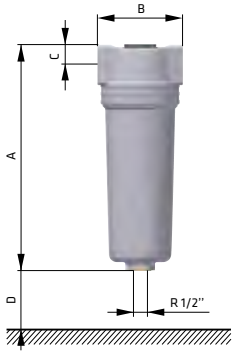

CORRECTION FACTORS

Operating pressure [bar]	2	3	4	5	6	7	8	9	10	11	12	13	14	15	16	17	18	19	20
Operating pressure [psi]	29	44	58	72	87	100	115	130	145	160	174	189	203	218	232	247	261	276	290
Correction factor	0,38	0,50	0,63	0,75	0,88	1	1,13	1,25	1,38	1,50	1,63	1,75	1,88	2,00	2,13	2,25	2,38	2,50	2,63

CS /CS SS SERIES

WELDED SEPARATORS

operating pressure	**16** bar
volume flow rate	**840** to **14280** Nm^3/h
connections	**DN65** to **DN300**
operating temp. range	**1,5** to **65** °C
standard colour CS	**RAL 9005**
material CS series	**carbon steel**
material CS SS series	**stainless steel 1.4301**

APPLICATIONS

- automotive
- electronics
- food and beverage
- chemical
- petrochemical
- plastics
- paint
- general industrial applications

DESCRIPTION

CS condensate separators are designed for high efficient removal of bulk liquids and large impurities from compressed air systems. The insert inside the housing creates controlled rotation of the air flow. Centrifugal flow of liquids (water, oil) and large particles is forced to the housing wall, slowed down and accumulated at the bottom of separator housing as condensate.

The turbulent free zone in the lower part of the cyclone housing prevents condensate from being picked up and "carried over" into the airstream. To discharge condensate from the CS cyclone separator it is essential to install automatic or electronic condensate drain. CS cyclone separators are also available in stainless steel version CS-SS.

CS

CS SS

AOK 20B	TD16M	CDI 16B	ECD-B	EMD12
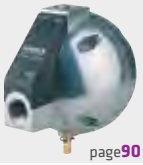				
page90	page88	page84	page82	page80

TECHNICAL DATA

Model		Pipe size	Max.oper. pressure	Flow rate at 7 bar(g), 20 °C		Temperature oper. range		Dimensions [mm]					Mass
carbon steel	stainless steel	DN	bar/psi	Nm³/h	SCFM	°C	°F	A	B	C	D	E	kg
CS 14	**CS SS 14**	65	16/232	840	495	1,5 - 65	35 - 149	613	153	302	45	1/2''	21
CS 28	**CS SS 28**	80	16/232	1710	1005	1,5 - 65	35 - 149	745	182	302	35	1/2''	26
CS 62	**CS SS 62**	125	16/232	3720	2190	1,5 - 65	35 - 149	1041	280	390	37	1/2''	56
CS 88	**CS SS 88**	150	16/232	5280	3110	1,5 - 65	35 - 149	1298	330	489	50	1/2''	94
CS 124	**CS SS 124**	200	16/232	7440	4380	1,5 - 65	35 - 149	1506	436	619	52	1/2''	147
CS 238	**CS SS 238**	300	16/232	14280	8404	1,5 - 65	35 - 149	1673	504	805	91	1/2''	290

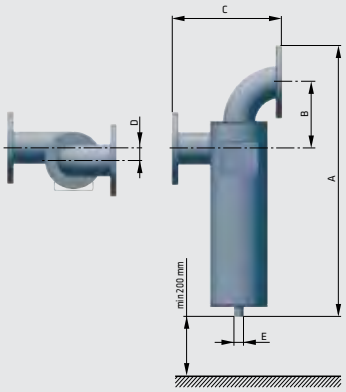

quality class - solids (ISO 8573-1)	-
quality class - water (ISO 8573-1)	8
quality class - oils (ISO 8573-1)	-
efficiency	>98%

CORRECTION FACTORS

Operating pressure [bar]	2	3	4	5	6	7	8	9	10	11	12	13	14	15	16
Operating pressure [psi]	29	44	58	72	87	100	115	130	145	160	174	189	203	218	232
Correction factor	0,38	0,50	0,63	0,75	0,88	1	1,13	1,25	1,38	1,50	1,63	1,75	1,88	2,00	2,13

SFH /SFH SS SERIES

WELDED SEPARATORS

operating pressure	**16** bar
volume flow rate	**1760** to **12550** Nm^3/h
connections	**DN80** to **DN350**
operating temp. range	**1,5** to **65** °C
standard colour SFH	**RAL 9005**
material SFH series	**carbon steel**
material SFH SS series	**stainless steel 1.4301**

APPLICATIONS

- automotive
- electronics
- food and beverage
- chemical
- petrochemical
- plastics
- paint
- general industrial applications

DESCRIPTION

SFH condensate separators are designed for high efficient removal of bulk liquids and large impurities from compressed air systems. The insert inside the housing creates controlled rotation of the air flow. Centrifugal flow of liquids (water, oil) and large particles is forced to the housing wall, slowed down and accumulated at the bottom of separator housing as condensate.

The turbulent free zone in the lower part of the cyclone housing prevents condensate from being picked up and "carried over" into the airstream. To discharge condensate from the SFH cyclone separator it is essential to install automatic or electronic condensate drain. SFH cyclone separators are also available in stainless steel version SFH-SS.

SFH

SFH SS

AOK 20B	TD16M	CDI 16B	ECD-B	EMD12
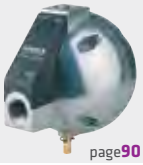				
page90	page88	page84	page82	page80

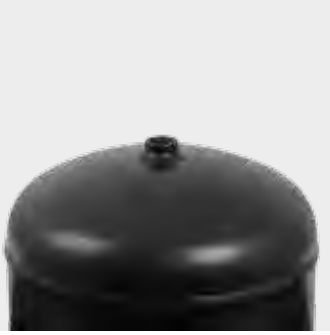

TECHNICAL DATA

Model		Pipe size	Max.oper. pressure	Flow rate at 7 bar(g), 20 °C		Temperature oper. range		Dimensions [mm]					Mass
carbon steel	stainless steel	DN	bar/psi	Nm³/h	SCFM	°C	°F	A	B	C	D	E	kg
SFH 029	**SFH SS 029**	80	16/232	1760	1024	1,5 - 65	35 - 149	720	400	165	219	1/2''	33
SFH 037	**SFH SS 037**	100	16/232	2200	1307	1,5 - 65	35 - 149	890	460	236	244	1/2''	45
SFH 066	**SFH SS 066**	125	16/232	3940	2331	1,5 - 65	35 - 149	980	550	250	273	1''	58
SFH 088	**SFH SS 088**	150	16/232	5300	3108	1,5 - 65	35 - 149	1040	570	250	300	1''	81
SFH 097	**SFH SS 097**	200	16/232	5820	3426	1,5 - 65	35 - 149	1110	690	265	350	1''	107
SFH 142	**SFH SS 142**	250	16/232	8520	5015	1,5 - 65	35 - 149	1330	800	360	480	1''	207
SFH 180	**SFH SS 180**	300	16/232	10770	6357	1,5 - 65	35 - 149	1470	820	408	550	1''	280
SFH 209	**SFH SS 209**	350	16/232	12550	7381	1,5 - 65	35 - 149	1670	920	471	622	1''	379

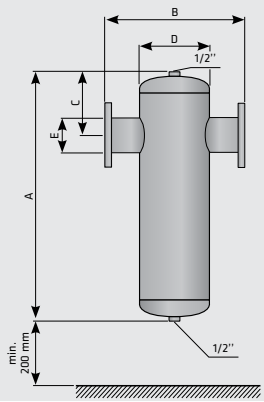

quality class - solids (ISO 8573-1)	-
quality class - water (ISO 8573-1)	8
quality class - oils (ISO 8573-1)	-
efficiency	>98%

CORRECTION FACTORS

Operating pressure [bar]	2	3	4	5	6	7	8	9	10	11	12	13	14	15	16
Operating pressure [psi]	29	44	58	72	87	100	115	130	145	160	174	189	203	218	232
Correction factor	0,38	0,50	0,63	0,75	0,88	1	1,13	1,25	1,38	1,50	1,63	1,75	1,88	2,00	2,13

CKL-HF SERIES

ALUMINIUM CONDENSATE SEPARATORS

operating pressure	**50** bar
volume flow rate	**71** to **2760** Nm^3/h
connections	**1/2"** to **3"**
operating temp. range	**1,5** to **65** °C
standard colour	**RAL 7040**

APPLICATIONS

- automotive
- electronics
- food & beverage
- chemical
- petrochemical
- plastics
- PET
- general industrial application

DESCRIPTION

CKL-HF condensate separators are designed for high efficient removal of bulk liquids from compressed air systems. Inside the housing there is a condensate separator element. This element separates already liquefied water from mainstream and prevents the liquids and large particles from being airborne again.
To discharge condensate from the CKL-HF condensate separator it is essential to install automatic or electronic condensate drain.

TD 150M

page88

EMD HP

page87

AOK 50B

page92

TECHNICAL DATA

Model	Pipe size	Max.oper. pressure	Flow rate at 7 bar(g), 20 °C		Temperature oper. range		Dimensions [mm]				Mass
	DN	bar/psi	Nm³/h	SCFM	°C	°F	A	B	C	D	kg
CKL-HF 007	1/2''	50/725	71	42	1,5 - 65	35 - 149	250	110	30	80	2,1
CKL-HF 010	3/4''	50/725	112	66	1,5 - 65	35 - 149	250	110	30	90	2,1
CKL-HF 018	1''	50/725	204	120	1,5 - 65	35 - 149	250	110	30	140	2,1
CKL-HF 047	1 1/2''	50/725	282	166	1,5 - 65	35 - 149	535	160	45	260	9,5
CKL-HF 070	1 1/2''	50/725	400	235	1,5 - 65	35 - 149	535	160	45	360	9,5
CKL-HF 094	2''	50/725	494	291	1,5 - 65	35 - 149	715	160	45	540	12,2
CKL-HF 150	2''	50/725	799	470	1,5 - 65	35 - 149	715	160	45	550	12,2
CKL-HF 200	3''	50/725	2160	1270	1,5 - 65	35 - 149	862	198	70	620	30,4
CKL-HF 140	3''	50/725	2760	1620	1,5 - 65	35 - 149	1010	198	70	780	34,9

quality class - solids (ISO 8573-1)	-
quality class - water (ISO 8573-1)	8
quality class - oils (ISO 8573-1)	-
efficiency	>98%

CORRECTION FACTORS

Operating pressure [bar]	3	5	7	10	13	16	20	30	40	50
Operating pressure [psi]	44	72	100	145	189	232	290	435	580	725
Correction factor	0,50	0,75	1	1,38	1,75	2,13	2,63	3,88	5,13	6,38

CKL-AHP SERIES ALUMINIUM HIGH PRESSURE SEPARATORS

operating pressure	**64** bar
volume flow rate	**30** to **720** Nm³/h
connections	**3/8"** to **2"**
operating temp. range	**1,5** to **65** °C
surface protection	anodization

APPLICATIONS

- general industrial applications
- automotive
- electronics
- food and beverage
- chemical
- petrochemical
- plastics
- paint

DESCRIPTION

CKL-AHP condensate separators are designed for high efficient removal of bulk liquids from compressed air systems. Condensate separator element inside the housing separates already liquified water from mainstream and prevents the liquids and large particles from being airborne again.
To discharge condensate from the CKL-AHP condensate separator it is essential to install automatic or electronic condensate drain.

VALVE

TECHNICAL DATA

Filter housing size	Pipe size	Max. oper. pressure	Flow rate at 7 bar(g), 20 °C		Temperature oper. range		Dimensions [mm]			Mass
	inch	bar/psi	Nm³/h	scfm	°C	°F	A	B	C	kg
CKL-AHP 005	3/8''	64/928	30	17,6	1,5 - 65	35 - 149	167	104	90	2,25
CKL-AHP 007	1/2''	64/928	60	35,3	1,5 - 65	35 - 149	167	104	90	2,25
CKL-AHP 010	3/4''	64/928	120	70,6	1,5 - 65	35 - 149	232	104	90	2,84
CKL-AHP 018	1''	64/928	180	106	1,5 - 65	35 - 149	258	150	120	6,45
CKL-AHP 030	1 1/4''	64/928	270	159	1,5 - 65	35 - 149	358	150	120	7,8
CKL-AHP 047	1 1/2''	64/928	360	212	1,5 - 65	35 - 149	458	150	120	9,17
CKL-AHP 094	2''	64/928	720	423	1,5 - 65	35 - 149	665	170	120	16,5

quality class - solids (ISO 8573-1)	-
quality class - water (ISO 8573-1)	8
quality class - oils (ISO 8573-1)	-
efficiency	>98%

CORRECTION FACTORS

Operating pressure [bar]	3	5	7	10	13	16	20	30	40	50	60	64
Operating pressure [psi]	44	72	100	145	189	232	290	435	580	725	870	928
Correction factor	0,50	0,75	1	1,38	1,75	2,13	2,63	3,88	5,13	6,38	7,63	8,13

CKL-CHP SERIES

CARBON STEEL HIGH PRESSURE SEP.

operating pressure	**100, 250, 400** bar
volume flow rate	**40** to **715** Nm^3/h
connections	**1/4"** to **2"**
operating temp. range	**1,5** to **65** °C
surface protection	Nickel plated 25 µm

APPLICATIONS

- general industrial applications
- automotive
- electronics
- food and beverage
- chemical
- petrochemical
- plastics
- paint

DESCRIPTION

CKL-CHP condensate separators are designed for high efficient removal of bulk liquids from compressed air systems. Condensate separator element inside the housing separates already liquified water from mainstream and prevents the liquids and large particles from being airborne again.
To discharge condensate from the CKL-CHP condensate separator it is essential to install automatic or electronic condensate drain.

VALVE

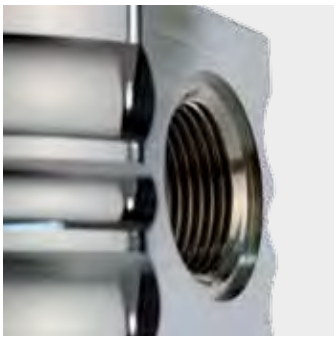

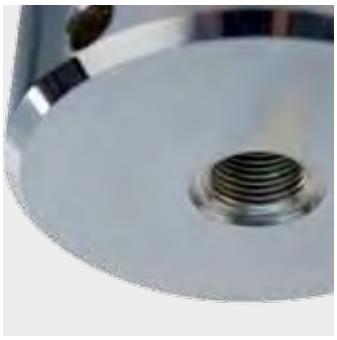

TECHNICAL DATA

Filter housing size	Pipe size	Max. oper. pressure	Flow rate at 7 bar(g), 20 °C		Temperature oper. range		Dimensions [mm]			Mass
	inch	bar/psi	Nm³/h	scfm	°C	°F	A	B	C	kg
CKL-CHP 003	1/4''	100/250/400	40	23,5	1,5 - 65	35 - 149	165	83,5	70	4,6
CKL-CHP 005	3/8''	100/250/400	70	41,2	1,5 - 65	35 - 149	165	83,5	70	4,6
CKL-CHP 007	1/2''	100/250/400	130	76,5	1,5 - 65	35 - 149	210	105	85	8,7
CKL-CHP 010	3/4''	100/250/400	195	115	1,5 - 65	35 - 149	210	105	85	9,3
CKL-CHP 018	1''	100/250/400	275	162	1,5 - 65	35 - 149	253	119	100	11,6
CKL-CHP 030	1 1/4''	100/250/400	380	223	1,5 - 65	35 - 149	303	119	100	16
CKL-CHP 047	1 1/2''	100/250/400	495	291	1,5 - 65	35 - 149	329	146	130	26,5
CKL-CHP 094	2''	100/250/400	715	421	1,5 - 65	35 - 149	415	182	150	49

quality class - solids (ISO 8573-1)	-
quality class - water (ISO 8573-1)	8
quality class - oils (ISO 8573-1)	-
efficiency	>98%

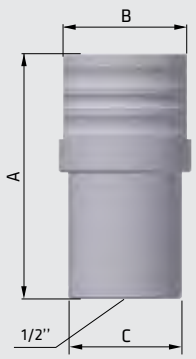

CORRECTION FACTORS

Operating pressure [bar]	7	25	40	64	100	250	400
Operating pressure [psi]	100	362	580	928	1450	3625	5800
Correction factor	1	3	5	8	12	12	12

Indicators

PDi16

DIFFERENTIAL PRESSURE INDICATOR

operating pressure	**16** bar
operating temp. range	**1,5** to **65** °C

APPLICATIONS

- automotive
- electronics
- food & beverage
- chemical
- petrochemical
- plastics
- paint
- general industrial application

DESCRIPTION

Pressure drop indicator PDI 16 is designed to indicate pressure drop across the filter element in compressed air system.
It detects when the filter cartridge is clogged and should be replaced. PDI 16 is typically installed on the head of the filter housing.
PDI 16 can be used in variety of applications. For applications not listed please contact us or your local dealer.

TECHNICAL DATA	
pressure drop (green area)	0 - 0,6 bar (0 - 8,7 psi)
pressure drop (red area)	0,6 - 0,9 bar (8,7 - 13 psi)
max. operating pressure	16 bar (232 psi)
operating temperature range	1,5 - 65 °C (35 - 149 °F)
mass	0,03 kg
DIMENSIONS	
A	35 mm
B	43 mm
C	ø40 mm
D	24 mm
E	M5

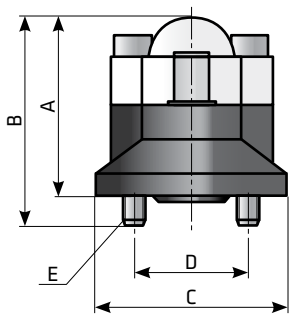

MDA60

DIFFERENTIAL PRESSURE INDICATOR

operating pressure	**20** bar
operating temp. range	**1,5** to **65** °C

APPLICATIONS

- automotive
- electronics
- food & beverage
- chemical
- petrochemical
- plastics
- paint
- general industrial application

DESCRIPTION

Pressure drop indicator MDA 60 is designed for accurate indication of pressure drop across the filter element in compressed air system[1]. MDA 60 is optimised for installation on the head of the filter housing.
MDA60 can be used in variety of applications. For applications not listed please contact producer or your local distributor.
[1]For any other technical gas please contact producer or your local distributor.

TECHNICAL DATA	
operating pressure range	0 - 20 bar (0 - 290 psi)
operating temperature range	1,5 - 65 °C (35 - 149 °F)
mass	0,36 kg
measuring range	2 bar (29 psi)
DIMENSIONS	
A	84 mm
B	80 mm
C	78 mm
D	ø40 mm
E	24 mm

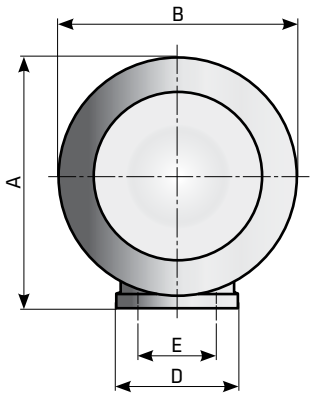

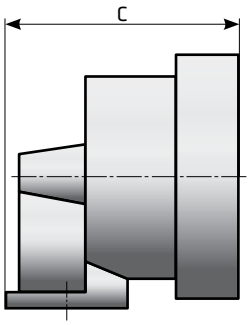

MDM40

DIFFERENTIAL PRESSURE INDICATOR

operating pressure	**20** bar
operating temp. range	**1,5** to **65** °C

APPLICATIONS

- automotive
- electronics
- food & beverage
- chemical
- petrochemical
- plastics
- paint
- general industrial application

DESCRIPTION

Magnetic differential manometer MDM 40 is designed to indicate pressure drop across the filter element in compressed air system(1).

It detects when the filter cartridge is clogged and should be replaced. MDM 40 is typically installed on the head of the filter housing.

MDM40 can be used in variety of applications. For applications not listed please contact producer or your local distributor.

(1)For any other technical gas please contact producer or your local distributor.

TECHNICAL DATA - MDM40	
operating pressure range	0 - 20 bar (0 - 290 psi)
operating temperature range	1,5 - 65 °C (35 - 149 °F)
mass	0,15 kg
measuring range	0,9 bar (13 psi)
DIMENSIONS	
A	54 mm
B	54 mm
C	65 mm
E	23,5 mm (24,0 mm)
F	M5

Model	Description
MDM 40	basic version
MDM 40C	voltage-free contact version for remote alarm

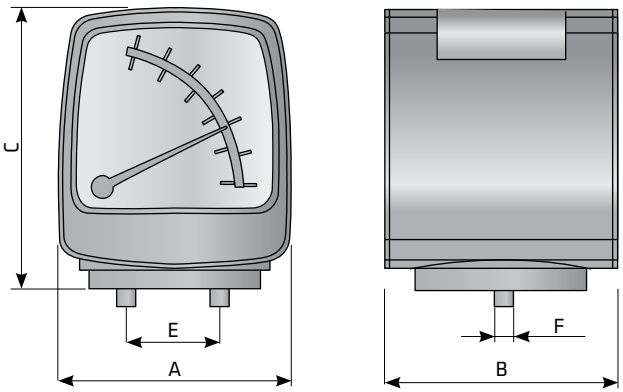

MDM60

DIFFERENTIAL PRESSURE INDICATOR

operating pressure	**16** bar
operating temp. range	**1,5** to **65** °C

APPLICATIONS

- automotive
- electronics
- food & beverage
- chemical
- petrochemical
- plastics
- paint
- general industrial application

DESCRIPTION

Magnetic differential manometer MDM 60 has been developed to indicate pressure drop across the filter element in compressed air system[1].

It detects when the filter cartridge is clogged and should be replaced. MDM 60 is typically installed on the head of the filter housing.

MDM60 can be used in variety of applications. For applications not listed please contact producer or your local distributor.

[1]For any other technical gas please contact producer or your local distributor.

MDM 60
basic version

MDM 60 E
electronic version
with LED alarm

MDM 60 C
voltage free contact version
for remote alarm

TECHNICAL DATA	
operating pressure range	0 - 16 bar (0 - 232 psi)
operating temperature range	1,5 - 65 °C (35 - 149 °F)
mass	0,15 kg
measuring range	0,9 bar (13 psi)
DIMENSIONS	
A	72 mm
B	64 mm
C	68 mm
D	74 mm
E	24 mm
F	M5

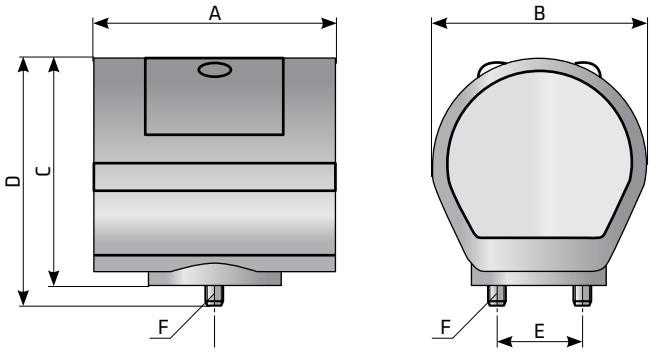

TYPES	
MDM 60	basic version
MDM 60E	electronic version (battery) with LED alarm light
MDM 60C	voltage-free contact version for remote alarm

EPG 60

ELECTRONIC PRESSURE GAUGE

operating pressure	**16** bar
operating temp. range	**1,5** to **40** °C

APPLICATIONS

- general industrial applications
- automotive
- electronics
- food and beverage
- chemical
- petrochemical
- plastics
- paint

DESCRIPTION

The EPG is electronic pressure gauge designed for monitoring of filter cartridge condition.

Filter cartridge condition is estimated from pressure drop, working hours, total hours or their combination. A change filter cartridge warning is issued when these parameters approach their limiting values.

An optional Alarm/ Warning output and Service Network Protocol for remote surveillance available.

EPG is battery operated. Low power consumption allows long intervals between battery replacements.

TECHNICAL DATA			
TYPE		**EPG-SN**	**EPG**
Service network connection possible		Yes	No
System pressure range		0-16 bar (0 – 232 psi)	
Differential pressure range		0,07 bar - 1,00 bar (1.0 psi – 14.5 psi)	
Max. differential pressure		1 bar, 14,7 psi	
Operating temperature	Ambient	1,5 °C - 40 °C (34,7 °F - 104 °F)	
	Compressed air	1,5 °C - 65 °C (34,7 °F - 149 °F)	
Mass		130 g (without batteries)	
Materials		PA6, glass fibres, NBR (sealing)	
Battery life time		>1 year (alkaline AA)	

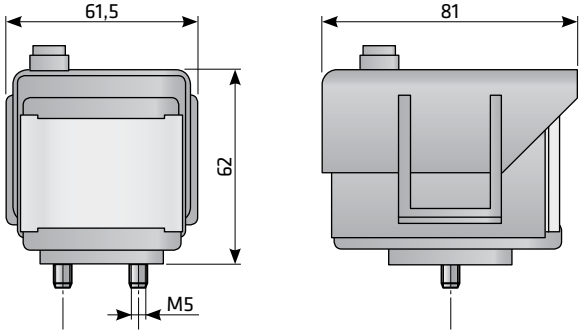

MDH

DIFFERENTIAL HIGH PRESSURE INDICATOR

operating pressure	**50** bar
operating temp. range	**1,5** to **65** °C

APPLICATIONS

- general industrial applications
- automotive
- electronics
- food and beverage
- chemical
- petrochemical
- plastics
- paint

DESCRIPTION

Differential pressure drop indicator MDH has been developed for accurate indication of pressure drop across the filter element in compressed air system. MDH is optimised for installation on the head of the filter housing.

TECHNICAL DATA		
Ambient temperature range	1,5 - 60 °C	35 - 140°F
Measuring range	0 – 1 bar	0 - 14,5 psi
Static pressure	50 bar	725 psi
Protection class	IP 54	
Accuracy	±3% of ful scale	
Connection	2 x G 1/8'' male	

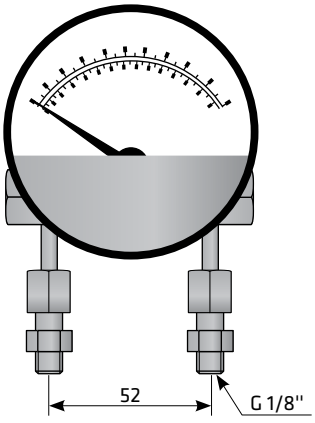

OCI

OIL CONTENT INDICATOR

operating pressure	**0,68 - 16** bar
operating temp. range	**1,5** to **49** °C

APPLICATIONS

- automotive
- electronics
- food & Beverage
- chemical
- petrochemical
- plastics
- paint
- general industrial application
- outlet of activated carbon filters
- outlet of activated carbon towers
- monitoring of oil content

DESCRIPTION

OCI oil content indicator has been designed to monitor oil content in pressure vessels and receivers where air quality is critical. It is calibrated to detect aerosol-mist level of oil with sensitivity down to 0,01 PPMm (0,012 mg/m³).

Replacement cartridge is available when original is worn out.

TECHNICAL DATA	
TYPE	**OCI A-4000-120**
Connection	G1/8"
Dimensions	166 x 16,2 mm
Mass	0,134 kg
Pressure range	0,68 - 16 barg
Operating temperature range	1,5 °C to 49 °C
Measuring range	0 - 25 PPM(m) at 20 °C 0 - 30 mg/m³

Accessories

AK

ASSEMBLY KIT FOR FILTERS

DESCRIPTION

Assembly kits have been developed to connect two or more air filters together. Construction of assembly kit is universal and it can be used for any type of filter, including filters of some other world producers. It is easy to connect two filters together and it includes supporting elements for easy mounting on the wall or other surface.

TECHNICAL DATA

Type	Connection	Operating temp.	Operating pressure	Max. load/ console	Mass
AK 3/8"	3/8"	1,5 - 65°C	0 - 20 bar	0,47	0,3
AK 1/2"	1/2"	1,5 - 65°C	0 - 20 bar	0,47	0,3
AK 3/4"	3/4"	1,5 - 65°C	0 - 20 bar	0,6	0,3
AK 1"	1"	1,5 - 65°C	0 - 20 bar	1,57	0,5
AK 1 1/2"	1 1/2"	1,5 - 65°C	0 - 20 bar	2,2	0,5
AK 2"	2"	1,5 - 65°C	0 - 20 bar	2,32	1,57
AK 2 1/2"	2 1/2"	1,5 - 65°C	0 - 20 bar	2,28	1,53
AK 3"	3"	1,5 - 65°C	0 - 20 bar	2,22	1,47

2S, 3S, 2M, 3M

ASSEMBLY KIT FOR FILTERS

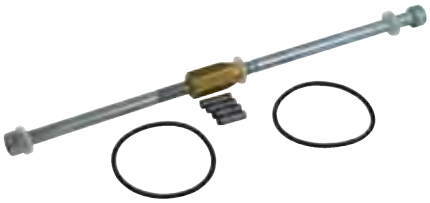

DESCRIPTION

Assembly kits are used for manifold 2 or 3 AF type filters together, without using interconnecting piping.

Types are:
- 2S 2 x AF 0056 to AF 0106
- 3S 2 x AF 0056 to AF 0106
- 2M 3 x AF 0186 to AF 0706
- 3M 3 x AF 0186 to AF 0706

WS/WM

WALL MOUNTING KIT FOR FILTERS

DESCRIPTION

Wall mounting kits have been developed to easily mount filter on the wall or other surface.
The kit contains 2 stainless steel consoles (which are mirrored) and 6 self-tapping screws.

TECHNICAL DATA

TYPE	WS	WM
Fits to filter housings	AF 0056 - AF 0106	AF 0186 - AF 0706
Operating temp.	-20 to +120 °C (-4 to 248°F)	
Max. load/console kit (kg)	6	15
Mass (kg)	0,35	0,6
Material	Stainless steel	

SG

SIGHT GLASS

DESCRIPTION

Sight glass has been developed for easy checking level of condensate accumulated in the bottom of compressed air filter bowl.

On every casted aluminium filter housing there is a pre casted area where sight glass can be mounted after appropriate holes are drilled.

TECHNICAL DATA	
TYPE	SG
Operating pressure	0 to 16 bar (0 to 232 psi)
Operating temp.	1,5 to +65 °C (35 to 149 °F)
Operating fluid	Air, water, oil
Mass (kg)	0,010
Material	PA12
Dimensions (mm)	59,0 x 20,5 x 11,0

ES

EXHAUST SILENCER

DESCRIPTION

ES series expansion silencers are designed for efficient noise reduction at variety of applications where compressed air is expanded/depresurised to ambient pressure.

TECHNICAL DATA					
Type	Connection	Operating pressure	Operating temperature	Dimensions [mm]	
				ø	h
ES 06050	1/4"	0-13 bar	1,5 to +65°C	51	69
ES 14050	3/8"			51	127
ES 12075	1/2"			75	131
ES 22075	3/4"			75	231
ES 22090	1"			90	231
ES 32090	1 1/4"			90	333
ES 32140	1 1/2"			140	336
ES 45140	2"			140	462

Condensate drains

EMD SERIES

ELECTRONIC CONDENSATE DRAIN

operating pressure	**16** bar
drain capacity	up to **75** l/h
connections	**1/2"**
operating temp. range	**1,5** to **65** °C

APPLICATIONS

- air compressor (piston or screw)
- after-cooler
- cyclone condensate separator
- pressure vessel/air tank
- air dryer
- air filter

DESCRIPTION

EMD12 series drain is designed for fully automatic discharging of condensate or any other non-aggressive fluid from compressed air system. The units can be installed as external drain on any application specified. Condensate accumulates in the collecting reservoir. When the level is high enough condensate is being discharged from the system without any air losses. Fluid level is detected by precise capacitive level sensor.

Special self-cleaning direct acting valve assures reliable operating. EMD series is also equipped with operation alarm, led indicator, test button and internal strainer. Version with Service Network for diagnostics parameter setting and alarm output is also available.

ADVANTAGES

- ✓ integrated strainer (easy access/cleaning)
- ✓ compact design
- ✓ direct acting, self cleaning valve (patented)
- ✓ optimised for easy service (service kit)
- ✓ horizontal or vertical installation
- ✓ PA housing

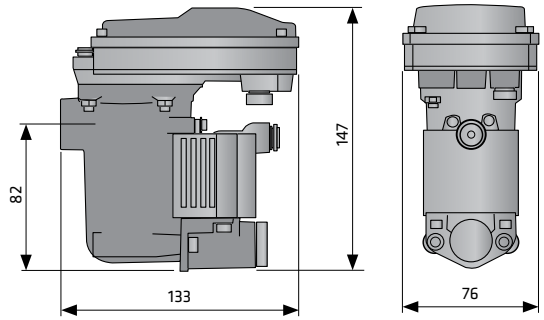

TECHNICAL DATA		EMD12	EMD12A	EMD12C	EMD12	EMD12A	EMD12C	EMD12	EMD12A	EMD12A	EMD25		EMD 75	
		230 V			115 V			24 Vac		24Vdc	230 V	115 V	230 V	115 V
Service network connection		-	-	✓	-	-	✓	-	-	-	-	-	-	-
Alarm output		-	✓	✓	-	✓	✓	-	✓	✓	-	-	-	-
Voltage		230 VAC, 50-60 Hz			115 VAC, 50-60 Hz			24 Vac, 50-60 Hz		24Vdc	230 V	115 V	230 V	115 V
Internal fuse		5 x 20 1A T			5 x 20 1A T			2A		2A	5 x 20 1A T		5 x 20 1A T	
Power		10 VA			10 VA			10 VA		8,5 A	24 A		24 A	
Operating pressure range		0-16 bar (0-232 psi)			0-16 bar (0-232 psi)			0-16 bar (0-232 psi)		0-8 bar	0-16 bar (0-232 psi)		0-16 bar (0-232 psi)	
Drain capacity (at 7 bar/101 psi)		12 l/h (0,007cfm)			12 l/h (0,007cfm)			12 l/h (0,007cfm)		12 l/h	25 l/h		75 l/h	
Operating temperature range		1,5-65°C (35-149°F)												
Inlet connection		G 1/2"			G 1/2"			G 1/2"		G 1/2"	G 1/2"		G 1/2"	
Outlet connection		Push connection for tube ø8												
Protection class		IP54												
Mass [kg]		0,55									0,9		1,2	
Dimensions A × B × C [mm]		133 x 76 x 147												
Peak compressor capacity [m³/min]	a	8,8									16,6		55,0	
	b	7,4									15,4		46,2	
	c	4,6									9,6		28,7	
Peak dryer capacity [m³/min]	a	18,56									38,6		116,0	
	b	14,9									31,0		93,1	
	c	9,28									19,3		58,0	
Peak filter capacity [m³/min]	a	92,8									193,3		580,0	
	b	74,4									154,9		465,0	
	c	46,4									96,6		290,0	

a	Northern Europe, Canada, Central Asia
b	Rest of the World
c	Moist tropical and subtropical regions

The amount of condensed water in compressed air system depends mainly on outside air temperature. Please take the relevant climate zone into account when dimensioning yours specific EMD-12 drain series application:

ECD-B SERIES

ELECTRONIC CONDENSATE DRAIN

operating pressure	**16** bar
drain capacity	**15 - 150** l/h
connections	**1/2"**
operating temp. range	**1,5** to **65** °C

APPLICATIONS

- air compressor (piston or screw)
- after-cooler
- cyclone condensate separator
- pressure vessel/air tank
- air filter

DESCRIPTION

ECD-B series have been developed for fully automatic discharging of condensate or any other non-aggressive fluid from compressed air[1] system. The units can be installed as external drain on any application specified.
Condensate accumulates in the collecting reservoir and when the level is high enough condensate is being discharged from the system without any air losses. Fluid level is detected by precise capacitive level sensor.
Special self-cleaning direct acting valve assures reliable operating. ECD-B series is also equipped with operation alarm, led indicator, test button and internal strainer.
ECD-B series can be used in variety of applications. For applications not listed please contact producer or your local distributor.

[1]For any other technical gas please contact producer or your local distributor.

ADVANTAGES

- ✓ integrated filter mesh
- ✓ compact design
- ✓ two-way connections
- ✓ eloxated housing
- ✓ contactless measuring
- ✓ direct acting, self cleaning valve (patented)
- ✓ operating diagnostic monitoring
- ✓ warning LED light for ''drain operating'' and ''alarm''
- ✓ AC versions (for DC version please contact producer)
- ✓ robust Al housing

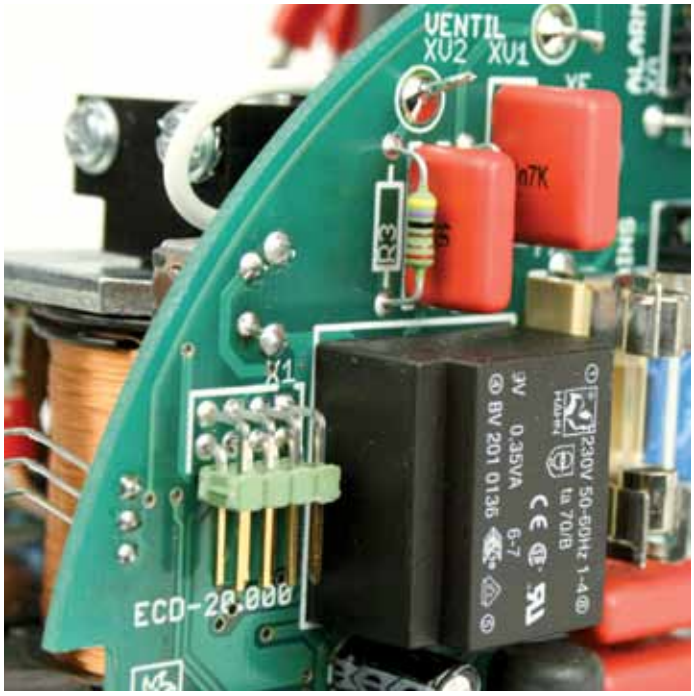

TECHNICAL DATA		ECD 15B	ECD 40B	ECD 90B	ECD 150B
Voltage	115 VAC	115 V ± 10 %	115 V ± 10 %	115 V ± 10 %	115 V ± 10 %
	230 VAC	230 V ± 10 %	230 V ± 10 %	230 V ± 10 %	230 V ± 10 %
Power	115 VAC	24 VA	24 VA	24 VA	24 VA
	230 VAC	24 VA	24 VA	24 VA	24 VA
Frequency		50-60 Hz			
Operating pressure		0-16 bar (0 - 232 psi)			
Drain capacity (at 7 bar/101 psi)		15 l/h (0,0088 cfm)	40 l/h (0,023 cfm)	90 l/h (0,053 cfm)	150 l/h (0,088 cfm)
Operating temperature range		1,5 - 65 °C (35-149 °F)			
Inlet connection		R 1/2''	R 1/2''	R 1/2''	R 1/2''
Outlet connection		R 1/8''	R 1/8''	R 1/8''	R 1/8''
Power interface		3 × 0,75 mm²	3 × 0,75 mm²	3 × 0,75 mm²	3 × 0,75 mm²
Protection class		IP54	IP54	IP54	IP54
Mass [kg]		0,9	0,9	1,05	1,15
Dimensions A × B × C [mm]		120 × 82 × 125	120 × 82 × 125	120 × 82 × 135	120 × 82 × 150
Peak compressor performance [m³/min]	a	11,6	29,4	60,6	111,6
	b	9,3	23,5	48,5	89,3
	c	5,8	14,7	30,3	55,8
Peak dryer performance [m³/min]	a	23,2	58,8	121,2	223,2
	b	18,6	47,0	97,0	178,6
	c	11,6	29,4	60,6	111,6
Peak filter performance [m³/min]	a	116	294	606	1116
	b	93	235	485	893
	c	58	147	303	558
Compressor motor power [kW]		up to 30	up to 75	up to 160	up to 315

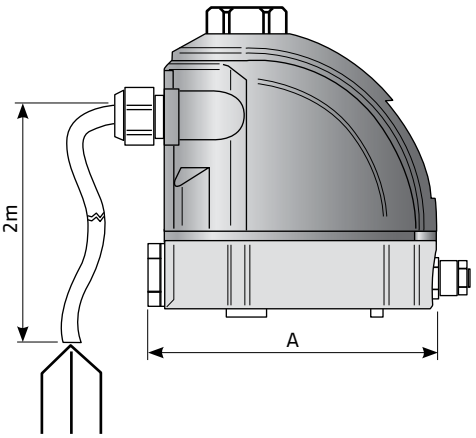

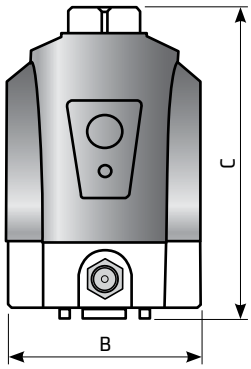

Please take the relevant climate zone into account when dimensioning yours specific ECD-B drain series application:

a	Northern Europe, Canada, Northern USA, Central Asia
b	Central and Southern Europe, Central America
c	South East Asian coastal regions, Oceania, Amazon and Congo regions

CDI 16B SERIES

ELECTRONIC CONDENSATE DRAIN

operating pressure	**16** bar
drain capacity	**45** l/h
connections	**1/2"**
operating temp. range	**1,5** to **65** °C

APPLICATIONS

- air compressor (piston or screw)
- after-cooler
- cyclone condensate separator
- pressure vessel/air tank
- air dryer
- air filter

DESCRIPTION

CDi16B is designed for fully automatic discharging of condensate or any other non-aggressive fluid from compressed air system. The unit can be installed as external drain on any application specified below.

Condensate accumulates in the collecting vessel and when the level is high enough condensate is being discharged from the system without any air losses. Electronic control system has a precise capacitive level sensor through which is controlled solenoid piston valve.

A special self-cleaning piston valve prevents disturbing the function of CDi16B caused by debris. CDi16B is also equipped with operation alarm, led indicator and test button.

TECHNICAL DATA		
Voltage	115 VAC	115 V ± 10 %
	230 VAC	230 V ± 10 %
Power	115 VAC	24 VA
	230 VAC	24 VA
Frequency		50-60 Hz
Operating pressure		0-16 bar(g) (0 - 232 psi)
Drain capacity (at 7 bar/101 psi)		45 l/h (0,0235 scfm)
Operating temperature range		1,5 - 65 °C (35-149 °F)
Inlet connection		R 1/2''
Outlet connection		R 1/8''
Power interface		3 × 0,75 mm²
Protection class		IP54
Mass [kg]		0,95
Dimensions A × B × C [mm]		115 × 85 × 165
Peak compressor performance [m³/min]	a	34,8
	b	27,9
	c	17,4
Peak dryer performance [m³/min]	a	69,6
	b	55,8
	c	34,8
Peak filter performance [m³/min]	a	348
	b	279
	c	174
Compressor motor power [kW]		up to 90

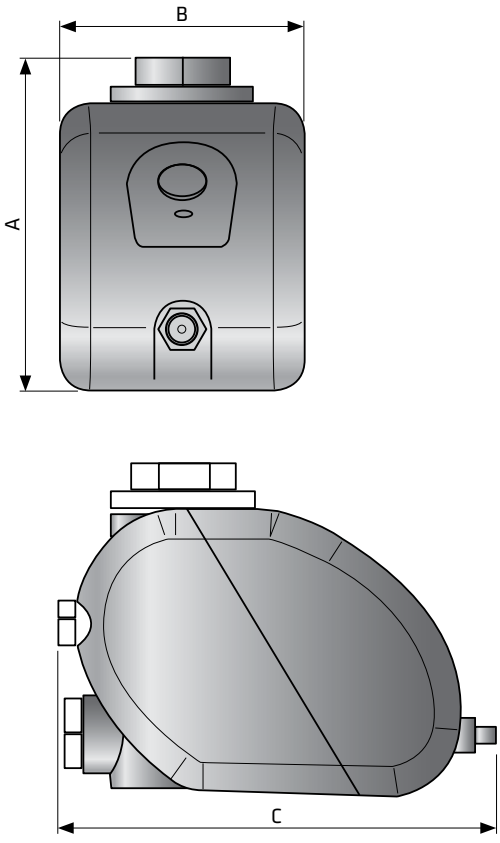

Please take the relevant climate zone into account when dimensioning yours specific ECD-B drain series application:

a	Northern Europe, Canada, Northern USA, Central Asia
b	Central and Southern Europe, Central America
c	South East Asian coastal regions, Oceania, Amazon and Congo regions

IED SERIES

ELECTRONIC CONDENSATE DRAIN

operating pressure	**0 - 16** bar
drain capacity	**8** l/h
connections	**1/2"**
operating temp. range	**1,5** to **65** °C

APPLICATIONS

- air filter

DESCRIPTION

IED drain series is designed for fully automatic discharging of condensate or any other non-aggressive fluid from compressed air system. The series is designed to discharge condensed water from filter housing primarily.

Condensate accumulates in the bottom of filter housing. Fluid level is detected by precise capacitive level sensor. When the level is high enough condensate is being discharged from the system without any air losses.

IED drain series is also equipped with led indicator and test button.

TECHNICAL DATA	IED		
	230 V	115 V	
Voltage	230 VAC, 50-60 Hz	115 VAC, 50-60 Hz	
Internal fuse	5 x 20 1A T	5 x 20 1A T	
Power	10 VA	10 VA	
Operating pressure range	0-16 bar (0-232 psi)	0-16 bar (0-232 psi)	
Drain capacity (at 7 bar/101 psi)	8 l/h at 7 bar (0,005 cfm at 101 psi)		
Operating temperature range	1,5-65°C (35-149°F)		
Inlet connection	G 1/2" parallel thread		
Protection class	IP54		
Mass [kg]	0,3		
Filter capacities by region			
	Northern Europe, Canada, Central Asia	Rest of the World	Moist tropical and subtropical regions
Peak filter capacity	70 m³/min	55 m³/min	34 m³/min

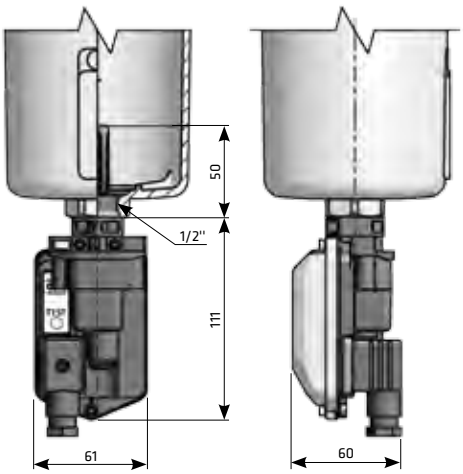

EMD HP SERIES HIGH PRESSURE ELECTRONIC COND. DRAIN

operating pressure	**50** bar
drain capacity	**30,4** l/h
connections	**1/2"**
operating temp. range	**1,5** to **65** °C

APPLICATIONS

- air compressor (piston or screw)
- after-cooler
- cyclone condensate separator
- pressure vessel/air tank
- air dryer
- air filter

DESCRIPTION

EMD HP series drain have been developed for fully automatic discharging of condensate or any other non-aggressive fluid from compressed air[1] system. The units can be installed as external drain on any application specified below. Condensate accumulates in the collecting reservoir and when the level is high enough condensate is being discharged from the system without any air losses. Fluid level is detected by precise capacitive level sensor.

EMD HP series is also equipped with operation alarm (version A), led indicator, test button and internal strainer. Version with Service Network (version C) for diagnostics and parameter setting is also available. Working hours, valve operations and other operating parameters are stored in internal memory and can be read with Service Network reader.

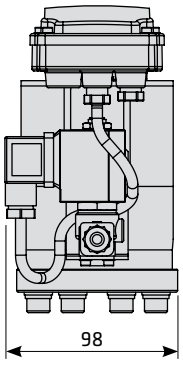

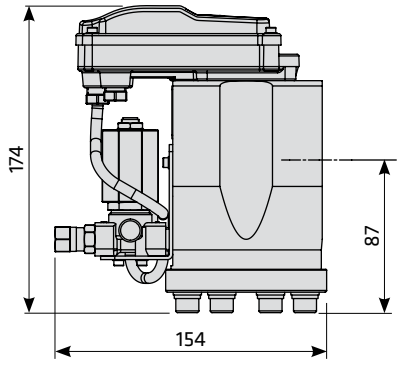

TECHNICAL DATA	EMD HP	EMD HP A	EMD HP C	EMD HP	EMD HP A	EMD HP C	EMDHP	EMD HP A	EMD HPA
	230 V			115 V			24 Vac		24Vdc
Service network connection	-	-	✓	-	-	✓	-	-	-
Alarm output	-	✓	✓	-	✓	✓	-	✓	✓
Voltage	230 VAC, 50-60 Hz			115 VAC, 50-60 Hz			24 Vac, 50-60 Hz		24Vdc
Internal fuse	5 x 20 1A T			5 x 20 1A T			2A		2A
Power	25 VA			25 VA			25 VA		22 W
Operating pressure range	0-50 bar (0-725 psi)			0-50 bar (0-725 psi)			0-50 bar (0-725 psi)		0-50 bar
Drain capacity (at 7 bar/101 psi)	30,4 l/h at 50 bar (0,018 cfm at 725 psi)								
Operating temperature range	1,5-65°C (35-149°F)								
Inlet connection	G 1/2" parallel thread								
Outlet connection	G 1/4" parallel thread								
Protection class	IP54								
Mass [kg]	2,3								

PEAK COMPRESSOR CAPACITY
The data apply for drain, located in the most unfavorable location i.e. compressor cyclone od pressure vessel.

System pressure	Northern Europe, Canada, Central Asia	Rest of the World	Moist tropical and subtropical regions
50 bar	29,5 m^3/min	22,2 m^3/min	12,9 m^3/min
40 bar	26,4 m^3/min	19,9 m^3/min	11,5 m^3/min
30 bar	22,9 m^3/min	17,2 m^3/min	10,0 m^3/min
20 bar	18,7 m^3/min	14,0 m^3/min	8,1 m^3/min

TD M SERIES

TIMER CONTROLLED CONDENSATE DRAIN

operating pressure	**16, 25, 50, 150** bar
drain capacity	**95** l/h
connections	**1/2"**
operating temp. range	**1,5** to **65** °C

APPLICATIONS

- air compressor (piston or screw)
- after-cooler
- cyclone condensate separator
- pressure vessel/Air tank
- air dryer
- air filter

DESCRIPTION

TD M timer controlled condensate drain is designed for reliable removal of condensate or other liquid from compressed air system[(1)]. Discharge intervals can be set with two adjustment knobs. TD M drain is available in several types based on operating pressure and operating medium.
TD M can be used in variety of applications. For applications not listed please contact us or your local dealer.

[(1)]For any other technical gas please contact producer or your local distributor.

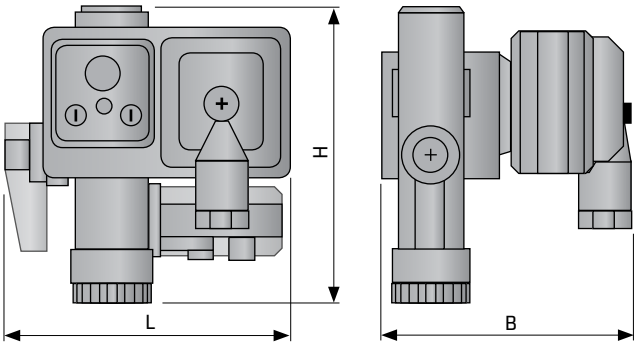

TECHNICAL DATA	TD16M		TD25M		TD50M		TD150M		TD16Mcr	
Supply voltage	115V	230V	115V	230V	115V	230V	115V	230V	115V	230V
Operating temp. range	1,5 - 65 °C (35-149 °F)		1,5 - 65 °C (35-149 °F)		1,5 - 65 °C (35-149 °F)		1,5 - 65 °C (35-149 °F)		1,5 - 65 °C (35-149 °F)	
Operating pressure	16 bar (232 psi)		25 bar (362 psi)		50 bar (735 psi)		150 bar (2175 psi)		16 bar (232 psi)	
Protection class	IP65		IP65		IP65		IP65		IP65	
Coil power	18VA (holding), 36 VA (inrush)		18VA (holding), 36 VA (inrush)		18VA (holding), 36 VA (inrush)		18VA (holding), 36 VA (inrush)		18VA (holding), 36 VA (inrush)	
Cable dimensions	3 × 0,75 mm²		3 × 0,75 mm²		3 × 0,75 mm²		3 × 0,75 mm²		3 × 0,75 mm²	
Mass (cable+valve)	0,35 kg		0,35 kg		0,35 kg		0,35 kg		0,35 kg	
Mass (strainer)	0,23 kg		0,23 kg		0,23 kg		-		0,23 kg	
Time ON	0,5 s - 10 s		0,5 s - 10 s		0,5 s - 10 s		0,5 s - 10 s		0,5 s - 10 s	
Time OFF	0,5 min - 45 min		0,5 min - 45 min		0,5 min - 45 min		0,5 min - 45 min		0,5 min - 45 min	
Drain capacity (at 7 bar)	95 l/h		95 l/h		95 l/h		95 l/h		95 l/h	
Flow rate Kvs	2,4 l/min		1,5 l/min		0,7 l/min		0,7 l/min		3,4 l/min	
Inlet connection	R 1/2''		R 1/2''		R 1/2''		R 1/2''		R 1/2''	
Outlet connection	R 1/4''		R 1/4''		R 1/4''		R 1/4''		R 1/4''	
Dimensions L×B×H [mm]	77×79×93	87,5×90,5×123	77×79×93	87,5×90,5×123	77×79×93	87,5×90,5×123	77×79×93	87,5×90,5×123	77×79×93	87,5×90,5×123
Medium	Air, water, oil		Air, water, oil		Air, water, oil		Air, water, oil		Agressive fluids	
Option strainer	yes		yes		yes		no		no	

AOK 20B

AUTOMATIC CONDENSATE DRAIN

operating pressure	**20** bar
drain capacity	**167** l/h
connections	**1/2"**
operating temp. range	**1,5** to **65** °C

APPLICATIONS

- air compressor (piston or screw)
- after-cooler
- cyclone condensate separator
- pressure vessel/air tank
- air dryer
- air filter

DESCRIPTION

AOK20 has been developed for fully automatic discharging of condensate or any other non-aggressive fluid from compressed air[1] system.

The unit can be installed as external drain on any application specified. Condensate accumulates in the aluminium reservoir and when the level is high enough condensate is being discharged from the system without any air losses. Direct acting valve is operated by precise level controlled floater which assures reliable and efficient operation. Thanks to robust aluminium housing AOK20 is suitable for heavy duty applications. AOK20 is also equipped with separate manual drain for venting.

AOK20 can be used in variety of applications. For applications not listed please contact producer or your local distributor

[1]For any other technical gas please contact producer or your local distributor.

RECOMMENDATIONS

Install ball valve between pressure vessel and inlet connection.

Install strainer element between pressure vessel and inlet connection.

Install nipple with venting tube to avoid generation of air bubbles.

Nipple is screwed in inlet connection.

TECHNICAL DATA	AOK 20B
Operating temperature range	1,5 - 65 °C (35-149 °F)
Operating pressure	20 bar (290 psi)
Mass	0,6 kg
Discharge capacity (at 7 bar/101 psi)	167 l/h
Inlet connection	G 1/2'' (NPT option)
Outlet connection	G 1/2'' (NPT option)
Dimensions A × B × C	135 × 110 × 130 mm
Medium	Condensate (air, water, oil)

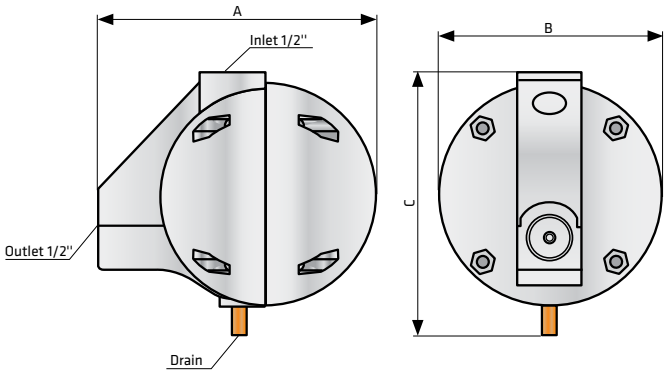

AOK 20SS

AUTOMATIC CONDENSATE DRAIN

operating pressure	**20** bar
drain capacity	**167** l/h
connections	**1/2"**
operating temp. range	**1,5** to **65** °C

APPLICATIONS

- air compressor (piston or screw)
- after-cooler
- cyclone condensate separator
- pressure vessel/air tank
- air dryer
- air filter

DESCRIPTION

AOK20 SS has is designed for fully automatic discharging of condensate or any other non-aggressive fluid from compressed air[1] system. The unit can be installed as external drain on any application specified below.

Condensate accumulates in the aluminium reservoir and when the level is high enough condensate is being discharged from the system without any air losses. Direct acting valve is operated by precise level controlled floater which assures reliable and efficient operation.

Thanks to robust stainless steel housing AOK20 SS is suitable for heavy duty applications. AOK20 SS is also equipped with separate manual drain for venting.

[1]For any other technical gas please contact producer or your local distributor.

RECOMMENDATIONS

Install ball valve between pressure vessel and inlet connection.

Install strainer element between pressure vessel and inlet connection.

Install nipple with venting tube to avoid generation of air bubbles.

Nipple is screwed in inlet connection.

TECHNICAL DATA	AOK 20 SS
Operating temperature range	1,5 - 65 °C (35-149 °F)
Operating pressure	0-20 bar (0-290 psi)
Min. reccomended operating pressure	1,5 bar(g) (21,8 psi)
Mass	4,5 kg
Discharge capacity (at 7 bar/101 psi)	167 l/h (at 7 barg) 252 l/h (at 16 barg)
Inlet connection	G 1/2'' (NPT on request)
Outlet connection	G 1/2'' (NPT on request)
Dimensions A × B × C	135 x 110 x 130
Medium	Condensate (air, water, oil); non agresive

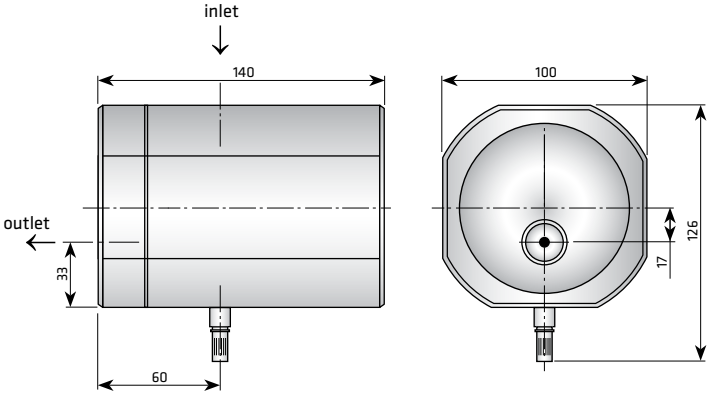

AOK 50B

AUTOMATIC HIGH PRESSURE CONDENSATE DRAIN

operating pressure	**50** bar
drain capacity	**167** l/h
connections	**1/2"**
operating temp. range	**1,5** to **65** °C

APPLICATIONS

- air compressor (piston or screw)
- after-cooler
- cyclone condensate separator
- pressure vessel/air tank
- air dryer
- air filter

DESCRIPTION

AOK 50B has is designed for fully automatic discharging of condensate or any other non-aggressive fluid from compressed air[1] system. The unit can be installed as external drain on any application specified below.

Condensate accumulates in the aluminium reservoir and when the level is high enough condensate is being discharged from the system without any air losses. Direct acting valve is operated by precise level controlled floater which assures reliable and efficient operation.

Thanks to robust housing AOK 50B is suitable for heavy duty applications. AOK 50B is also equipped with separate manual drain for venting.

[1]For any other technical gas please contact producer or your local distributor.

RECOMMENDATIONS

Install ball valve between pressure vessel and inlet connection.

Install strainer element between pressure vessel and inlet connection.

Install nipple with venting tube to avoid generation of air bubbles.

Nipple is screwed in inlet connection.

TECHNICAL DATA	AOK 50B
Operating temperature range	1,5 - 65 °C (35-149 °F)
Operating pressure	0-50 bar (0-725 psi)
Min. reccomended operating pressure	1,5 bar(g) (21,8 psi)
Discharge capacity (at 7 bar/101 psi)	167 l/h (at 7 barg)
Inlet connection	G 1/2'' (NPT on request)
Outlet connection	G 1/2'' (NPT on request)
Dimensions A × B × C	135 x 110 x 130
Medium	Condensate (air, water, oil); non agresive

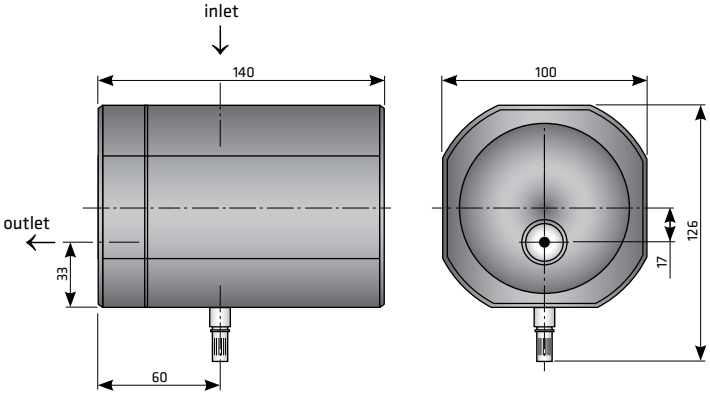

AOK16B SERIES

AUTOMATIC CONDENSATE DRAIN

operating pressure	**16** bar
operating temp. range	**1,5** to **65** °C

APPLICATIONS

- cyclone condensate separator
- air filter

DESCRIPTION

AOK16B is designed for fully automatic discharging of condensate or any other non-aggressive fluid from compressed air[1] system. AOK16B is easy to install inside to the filter housing.

AOK16B can be used in variety of applications. For applications not listed please contact producer or your local distributor.

[1]For any other technical gas please contact producer or your local distributor.

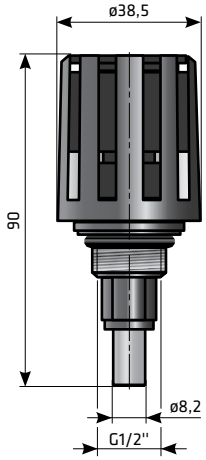

TECHNICAL DATA	AOK 16B
Operating temp. range	1,5 - 65 °C (35-149 °F)
Operating pressure	0 - 16 bar (0 - 232 psi)
Mass	0,04 kg
Connection	G 1/2''
Outlet connection	ø8
Dimensions H × D	90 × ø38,5 mm
Medium	Condensate (air, water, oil)

AOK16F SERIES

AUTOMATIC CONDENSATE DRAIN

operating pressure	**16** bar
operating temp. range	**1,5** to **50** °C

APPLICATIONS

- air filter

DESCRIPTION

AOK16F is designed for fully automatic discharging of condensate or any other non-aggressive fluid from compressed air[1] system. AOK16F is easy to install inside to the filter housing.

AOK16F can be used in variety of applications. For applications not listed please contact producer or your local distributor.

[1]For any other technical gas please contact producer or your local distributor.

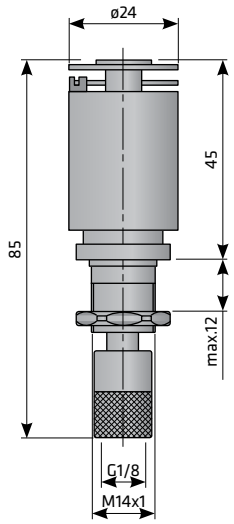

TECHNICAL DATA	AOK 16F
Operating temp. range	1,5 - 65 °C
Operating pressure	0 - 16 bar (0 - 232 psi)
Mass	0,05 kg
Connection	ø 14 mm
Outlet connection	G 1/8
Dimensions H × D	85 × ø24 mm
Medium	Condensate (air, water, oil)

MCD SERIES

MANUAL CONDENSATE DRAIN

operating pressure	**0 - 20** bar
operating temp. range	**1,5** to **65** °C

APPLICATIONS

- air filter

DESCRIPTION

MCD is designed for the discharging of condensate or any other non-aggressive fluid from compressed air[1] system. In order to prevent condensate from re-entering in the airstream we recommend controlling the condensate level in filter bowl, which requires an automatic drain trap.
MCD is easy to install on the filter housing. MCD can be used in variety of applications.
[1]For any other technical gas please contact producer or your local distributor.

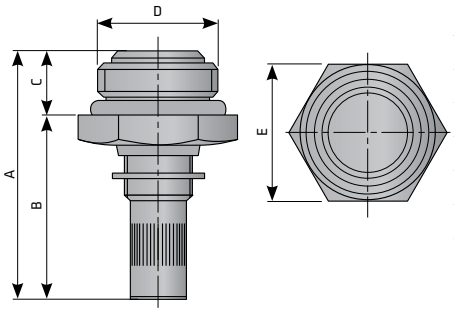

TECHNICAL DATA		MCD	MCDi
Operating temp. range		1,5 - 65 °C (35-149 °F)	1,5 - 65 °C (35-149 °F)
Operating pressure		0-20 bar (290 psi)	0-20 bar (290 psi)
Mass		0,06 kg	0,06 kg
Connection		G 1/2''	G 1/2''
Dimensions	A	38,2 mm	38,2 mm
	B	29,2 mm	29,2 mm
	C	9 mm	9 mm
	D	G1/2''	G1/2''
	E	24,0 mm	24,0 mm
Medium		Condensate (air, water, oil)	Condensate (air, water, oil)
Material		brass	stainless steel

MCD-B SERIES

MANUAL CONDENSATE DRAIN

operating pressure	**0** to **16** bar
operating temp. range	**1,5** to **65** °C

APPLICATIONS

- air filter

DESCRIPTION

MCD-B is designed for manual discharging of condensate or any other non-aggressive fluid from compressed air[1] system. MCD-B is easy to install on the filter housing. Condensate can be drained only manually. MCD-B is closed even if the system is non-pressurized.
MCD-B can be used in variety of applications.
[1]For any other technical gas please contact producer or your local distributor.

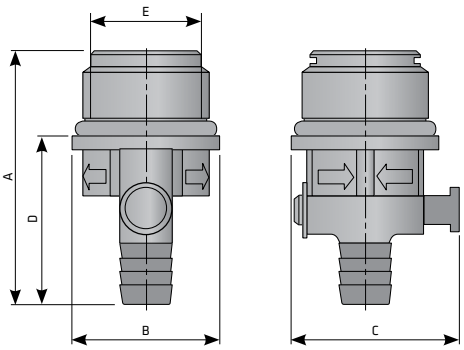

TECHNICAL DATA		MCD-B
Operating temp. range		1,5 - 65 °C (35-149 °F)
Operating pressure		0 - 16 bar (0 - 232 psi)
Mass		0,011 kg
Connection		G 1/2''
Dimensions	A	41,5 mm
	B	ø24,0 mm
	C	27,5mm
	D	27,5mm
	E	G1/2''
Medium		Condensate (air, water, oil)

Oil/water separation equipment

WOSm SERIES

WATER - OIL SEPARATORS

operating temp. range	**1,5** to **45** °C
inlet connection	**ø8** mm
DIBt number	**Z-83.5-31**

APPLICATIONS

- compressed air systems
- suitable for installation inside compressors
- compressed air dryers
- condensate separators
- pressure vessels

DESCRIPTION

WOSm water oil separators have been developed to separate lubricant oil from condensate generated in compressed air systems. Due to patented technology regular service can be done in 30 seconds without any cleaning.

Separation begins in “cyclonic depressurization chamber” and continues in “filter cartridge”. When the “filter cartridge” is fully saturated you just simply unscrew complete cartridge and replace it with new one.

All the condensate stays in old cartridge which can also be sealed with plastic cover and disposed according to local directives and laws.

ADVANTAGES

- ✓ Quick and clean separator cartridge replacement.
- ✓ Easy installation due to compact design and small dimensions.

OMEGA AIR
Z-83.5-31
Deutsches Institut für Bautechnik, Berlin

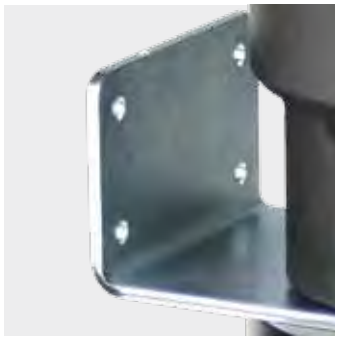

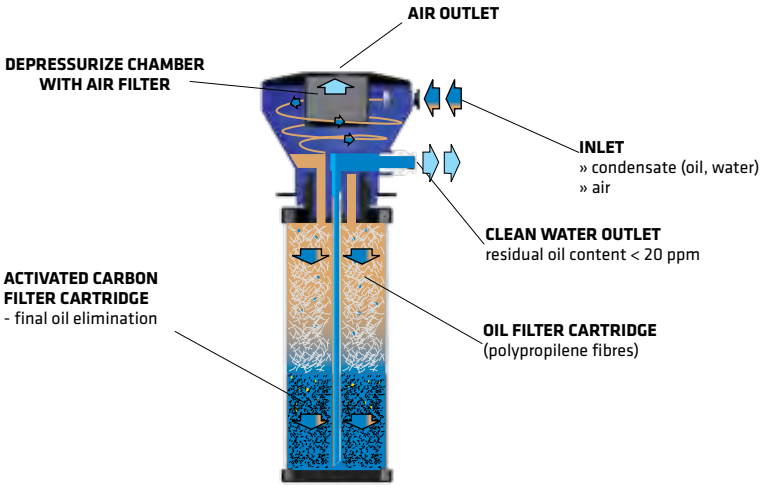

TECHNICAL DATA

Operating temperature	1,5 - 45 °C (max 65 °C)[1]; 35 - 113 °F (max. 149 °F)[1]
Operating media	Condensate (air, water, oil); Non agresive; Not suitable for emulsion
Residual oil content	< 20ppm
Service interval	When first of following parametres appears:
	- 4000 operating hours of compressor [2]
	- 12 months regardless of compressor operating hours
	- when all white polypropylene media becomes yellow

		Cold climate zone 15 °C 60 %RH	Mild climate zone 25 °C 60 %RH	Hot climate zone 40 °C 100 %RH	Dimensions [mm] A	B	C	D	E
WOSm1	Max oil adsorption [g]	740	650	370	483	106	80	335	50
	Max FAD [Nm³/min]/[scfm]	1,23/43,05	1,08/37,8	0,62/21,9					
	Max condensate flow [l/h]	0,57	0,90	1,91					
WOSm2	Max oil adsorption [g]	1520	1340	770	816	106	80	670	50
	Max FAD [Nm³/min]/[scfm]	2,54/88,9	2,23/78,05	1,28/45,2					
	Max condensate flow [l/h]	1,19	1,87	3,96					

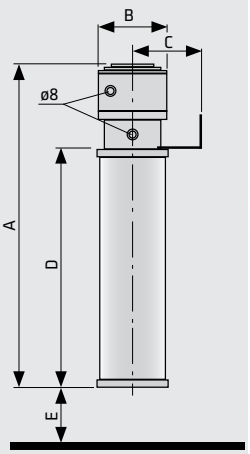

[1] Max. operating temperature is 65 °C, but when temperature is over 45 °C, performance may decrease.

[2] At compressor oil carryover 2,5 mg/m³. Lower/higher oil carry over means proportionally longer/shorter lifetime (e.g. if oil carryover is 5 mg/m³ lifetime reduces to 2000 operating hours).

WOS SERIES

WATER - OIL SEPARATORS

operating temp. range	**1,5** to **45** °C
inlet connection	**ø10** mm
DIBt number	**Z-83.5-31**

APPLICATIONS

- compressed air systems

DESCRIPTION

WOS water oil separators have been developed to separate lubricant oil from condensate from compressed air systems.

WOS water-oil separator can be used in variety of applications. For applications not listed please contact producer or your local distributor.

ADVANTAGES

- ✓ No complex sizing required.
- ✓ Simple to install.
- ✓ Works with any type od condensate drain.
- ✓ Can handle and separate any type of oil.
- ✓ Oil residue value is less than 10 ppm.
- ✓ Easy to maintain.
- ✓ No condensate settling tank is required (therefore there is no bacteria build-up).
- ✓ Small compact design.
- ✓ Test valve and test set included for sampling purposes.

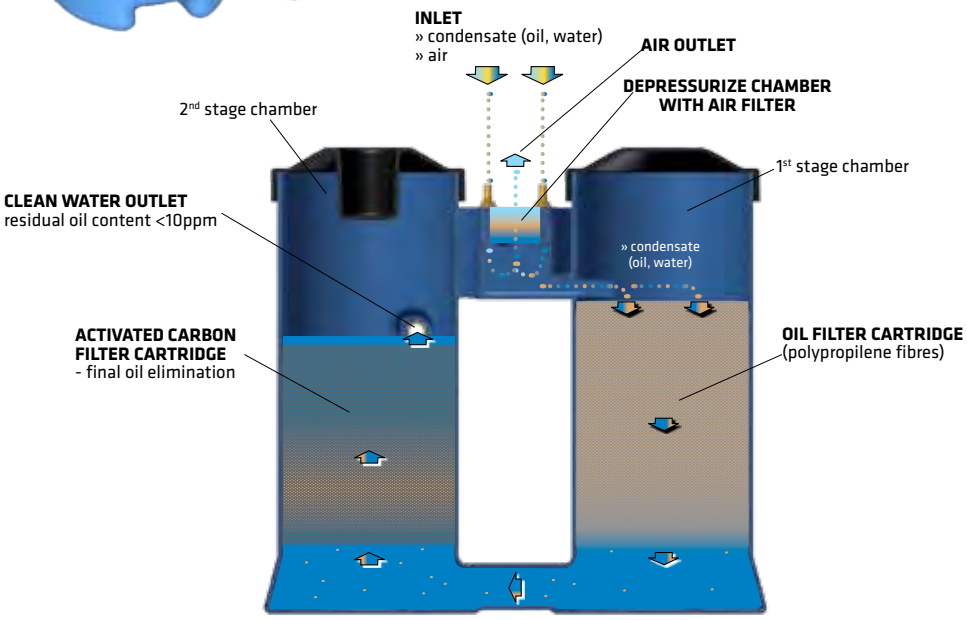

OMEGA AIR
Z-83.5-31
Deutsches Institut für Bautechnik, Berlin

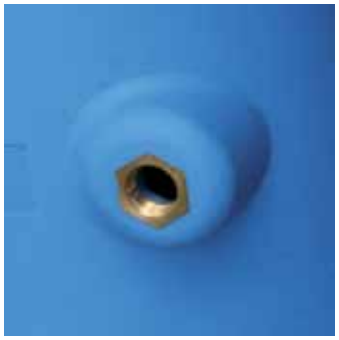

Water quality test

Water quality test should be performed at least once per month, to control the contamination level of disposed condensate.

If oil concentration is reached, oil filter cartridges must be changed.

TECHNICAL DATA

Operating temperature	1,5 - 45 °C (max 65 °C)[3]; 35 - 113 °F (max. 149 °F)[3]
Operating media	Condensate (air, water, oil); Non agresive; Not suitable for emulsion
Residual oil content	< 10ppm
Service interval	When first of following parametres appears:
	- 4000 operating hours of compressor [4]
	- 12 months regardless of compressor operating hours
	- outlet oil concentration reaches concentration determined with local directives

Technical data		Cold climate zone 15 °C 60 %RH	Mild climate zone 25 °C 60 %RH	Hot climate zone 40 °C 100 %RH	Dimensions [mm] A	B	C
WOS-4	Max oil adsorption [kg]	2,89	2,43	1,23	416	243	411
	Max FAD [Nm³/min]/[scfm]	4,82/170	4,04/142	2,05/72,3			
	Max condensate flow [l/h]	2,3	3,4	6,3			
WOS-8	Max oil adsorption [kg]	6,01	5,04	2,55	730	343	680
	Max FAD [Nm³/min]/[scfm]	10,0/353	8,4/296	4,25/150			
	Max condensate flow [l/h]	4,7	7,1	13,1			
WOS-20	Max oil adsorption [kg]	14,64	12,28	6,22	820	366	940
	Max FAD [Nm³/min]/[scfm]	24,4/861	20,5/723	10,37/366			
	Max condensate flow [l/h]	11,4	17,2	32,0			
WOS-35	Max oil adsorption [kg]	25,4	21,31	10,79	960	386	1137
	Max FAD [Nm³/min]/[scfm]	42,3/1495	35,5/1254	17,99/635			
	Max condensate flow [l/h]	19,8	29,8	55,6			

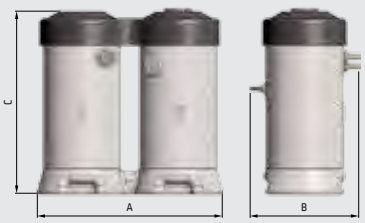

[3] Max. operating temperature is 65 °C, but when temperature is over 45 °C, performance may decrease.
[4] At compressor oil carryover 2,5 mg/m³. Lower/higher oil carry over means proportionally longer/shorter lifetime (e.g. if oil carryover is 5mg/m³ lifetime reduces to 2000 operating hours).

WOS CD SERIES

CONDENSATE DISTRIBUTOR

operating temp. range	**1,5** to **65** °C
inlet connection sizes	**3/4"** to **3"**
outlet hose connection	see specification

APPLICATIONS

- automotive
- electronics
- food & Beverage
- chemical
- petrochemical
- plastics
- paint
- general industrial application

DESCRIPTION

WOS CD is intended for systems, where amount of generated condensate exceeds capacity of single largest available WOS water oil separator. WOS CD can evenly distribute collected condensate between up to three WOS 35 water oil separators.

WOS CD is equipped with flow distributor on the inlet port, up to 8 hosetail connections mounted on elbows for convenient outlet, manual ball valve for cleaning purpose and vent port for safe aeration. Optional wall mounting kit is available. Maximum capacity in regard to free air delivery, when connected to WOS-35 is 120 Nm^3/min.

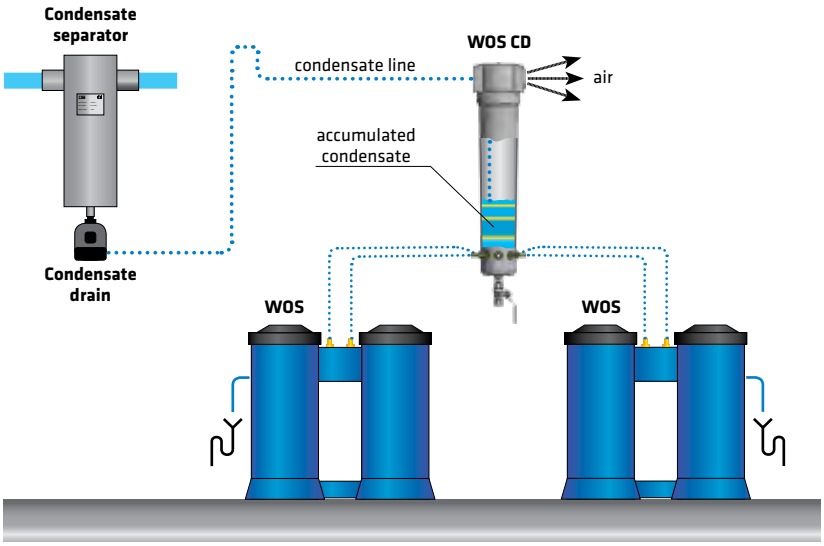

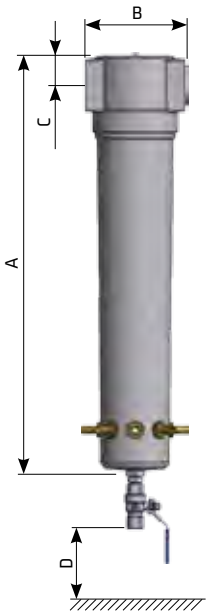

TECHNICAL DATA

Type	Pipe size	Hosetail connections	Dimensions [mm]				Volume	Mass
	inch	pcs	A	B	C	D	L	kg
WOS CD 2	3/4''	2	257	88	20	140	0,6	1,2
WOS CD 4	1 1/2''	4	461	125	32	140	2,8	3
WOS CD 8	2''	8	684	163	43	140	6,0	6
WOS CD 12	3''	12	795	240	59	140	20,0	12,9

Compressed air dryers

A-DRY SERIES

HEATLESS ADSORPTION DRYERS

operating pressure	**4** to **16** bar
temp. operating range	**1,5** to **50** °C
pressure dew points	**-40**°C **(-25**°C **/ -70**°C**)**
flow rate	**6** to **200** Nm³/h

APPLICATIONS

- compressed air systems

DESCRIPTION

A-DRY desiccant adsorption dryer has been designed to separate water moisture from compressed air thus reducing the dew point in the system. A-DRY is a range of products offering our customers a wide array of dried air solutions with volumetric flow rates ranging from 6 Nm³/h to 200 Nm³/h.

An innovative new design of A-DRY adsorption driers, developed with consideration of our customers, enables fast and reliable installation, use and servicing. Installation is simple with our ready to use controller while minimising the number of parts and motions required for assembly and disassembly makes servicing fast and reliable.

ADVANTAGES

- ✓ Wide range of products to fit your need.
- ✓ Robust and intuitive ready to use controller.
- ✓ Simple assembly and disassembly.
- ✓ Fast and reliable servicing.
- ✓ Adsorbent in cartridges
- ✓ Standard version includes coalescing pre-filter and particle afterfilter

TECHNICAL DATA

Type	Connection IN/OUT	Nominal volume flow		Dimensions						Mass
		Inlet[1]	Outlet[2]							
	''	[Nm³/h]	[Nm³/h]	A [mm]	A* [mm]	B [mm]	B* [mm]	C [mm]	C* [mm]	kg
A-DRY 06	G3/8''	6	4,7	339	404	288	552	100	120	10,5
A-DRY 12	G3/8''	12	9,4	573	638	288	552	100	120	13,5
A-DRY 24	G3/8''	24	18,8	1041	1106	288	552	100	120	19,0
A-DRY 36	G3/8''	36	28,2	1509	1574	288	552	100	120	27,5
A-DRY 60	G1/2''	60	47,0	1041	1106	370	634	148	170	45,0
A-DRY 75	G1/2''	75	58,8	1275	1340	370	634	148	170	53,0
A-DRY 105	G1/2''	105	61,8	1743	1808	370	634	148	170	70,0
A-DRY 150	G1''	150	88,3	1345	1455	440	815	198	240	170,5
A-DRY 200	G1''	200	117,7	1538	1648	440	815	198	240	182,2

Operating pressure range	4 to 16 bar
Operating temperature range	+1,5 °C to +50 °C
Pressure dew points	-25 °C / -40 °C / -70 °C
Voltage, frequency	230V, 50/60 Hz
Power consumption	<30 W
Protection class	IP 65
Filter (inlet)*	super fine - 0,01 µm
Filter (outlet)	dust filter; 1 µm

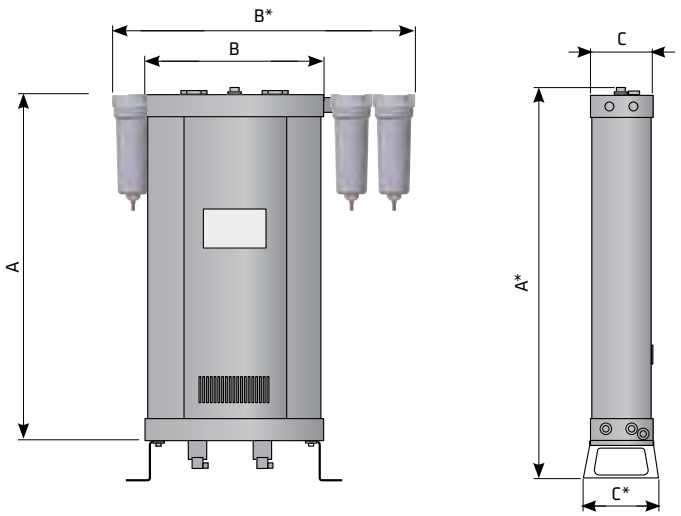

(1) Refers to 1bar(a) and 20°C at 7 bar operating pressure, inlet temperature 35°C and pressure dew point at outlet -40°C.

(2) Outlet flow refers to typical assumption during regeneration phase for operating at nominal inlet flow conditions. Outlet flow includes average air losses of approximately 17,3 %.

* If dryer is supplied without inlet filter compressed air class 1 (ISO 8753-1) for solid particles and oil should be provided to the inlet of the dryer.

CORRECTION FACTORS - F1															
Operating pressure [bar]	2	3	4	5	6	7	8	9	10	11	12	13	14	15	16
Operating pressure [psi]	29	44	58	72	87	100	115	130	145	160	174	189	203	218	232
Correction factor	0,38	0,5	0,63	0,75	0,88	1	1,13	1,25	1,38	1,50	1,63	1,75	1,88	2,00	2,13

CORRECTION FACTORS - F2						
Inlet temperature [°C]	25	30	35	40	45	50
Correction factor	1,00	1,00	1,00	0,97	0,87	0,80

DEW POINT			
[°C]	-25	-40	-70
C_D	1,1	1	0,7

X-DRY SERIES

HEATLESS REGENERATED MODULAR ADSORPTION DRYERS

operating pressure	**4** to **16** bar
operating temp.range	**1,5** to **50** °C
pressure dew points	**-40**°C **(-25**°C **/ -70**°C**)**
flow rate	**300** to **1050** Nm³/h

APPLICATIONS

- compressed air systems

DESCRIPTION

X-DRY 300-1050 modular adsorption dryers are designed for continuous separation of water vapour from compressed air thus reducing dew point. Operation of dryer requires two columns operated alternately.
Adsorption takes place under pressure in first column while second column regenerates with a portion of already dried compressed air at ambient pressure.
A dryer consists of two columns, filled with desiccant beads, controller with LCD dicplay, valves, manometers, support construction and suitable filter housings with the required filter element. Proven robust design enables efficient and reliable operation, fast installation and simple maintenance.

TECHNICAL DATA

Type	Connection IN/OUT[3]	Nominal volume flow		Dimensions			Mass
		Inlet[1]	Outlet[2]				
	''	[Nm³/h]	[Nm³/h]	A [mm]	B [mm]	C [mm]	kg
X-DRY 300	G 1''	300	-	570	670	1450	350
X-DRY 450	G 1 1/2''	450	-	570	870	1450	520
X-DRY 600	G 1 1/2''	600	-	570	1070	1450	690
X-DRY 750	G 2''	750	-	570	1270	1450	860
X-DRY 900	G 2''	900	-	570	1470	1450	1030
X-DRY1050	G 2''	1050	-	570	1670	1450	1200

[1] Refers to 1bar(a) and 20°C at 7 bar operating pressure, inlet temperature 35°C and pressure dew point at outlet -40°C.
[2] Outlet flow refers to typical assumption during regeneration phase for operating at nominal inlet flow conditions. Outlet flow includes average air losses of approximately 17,3 %.
[3] Reffers to inlet and outlet filter housing.

Operating pressure range	4 to 16 bar
Operating temperature range	+1,5°C to +60°C
Pressure dew points	-40°C (-25°C / -70°C)
Voltage, frequency	230V, 50/60 Hz
Power consumption	<60 W
Protection class	IP 65
Filter (inlet)*	super fine - 0,01 µm
Filter (outlet)	dust filter; 1 µm

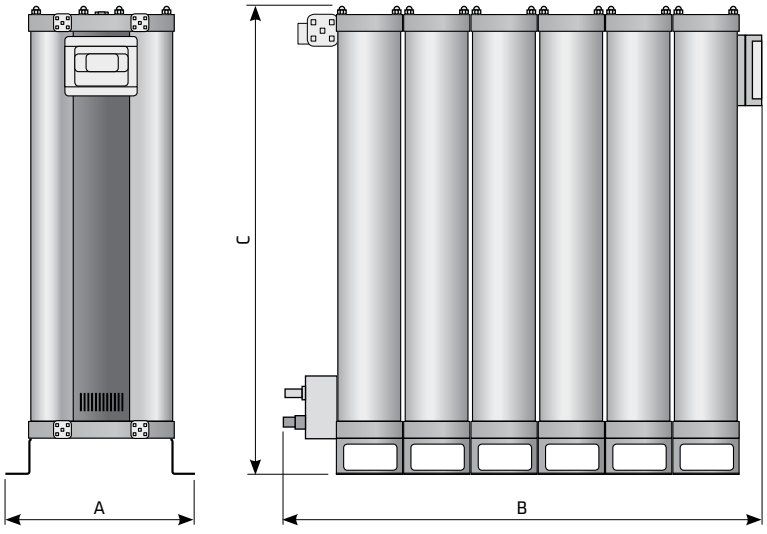

B-DRY SERIES

HEATLESS REGENERATED ADS. DRYERS

operating pressure	**4** to **16** bar
operating temp.range	**1,5** to **60** °C
pressure dew points	**-40**°C **(-25**°C **/ -70**°C**)**
flow rate	**110** to **1000** Nm³/h

APPLICATIONS

- compressed air systems

DESCRIPTION

B-DRY adsorption dryers are designed for continuous separation of water vapour from the compressed air thus reducing the pressure dew point. B-DRY series dryer consists of two columns, filled with desiccant beds, controller with LCD display, valves, manometers, support construction and suitable filter housings with the required filter element. Adsorption takes place under pressure in the first column while the second column regenerates with a portion of already dried compressed air at ambient pressure.

When the first column is saturated to a certain level column switch-over is carried out and the process of adsorption continues in the second column without any drop of pressure at the outlet of the dryer. Regeneration of saturated desiccant is possible because a small portion of already dry compressed air is decompressed and when expanded it becomes extremely dry.

This portion of extremely dry decompressed air also called “purge air” is then fed through the saturated column in the reverse flow direction in order to remove the adsorbed water molecules from the desiccant and release them back to the ambient.

TECHNICAL DATA

Type	Connection IN/OUT	Nominal volume flow		Dimensions			Mass
		Inlet[1]	Outlet[2]				
	''	[Nm³/h]	[Nm³/h]	A [mm]	B [mm]	C [mm]	kg
B-DRY 110	G1''	110	86,0	650	390	1570	126
B-DRY 150	G1''	150	117,5	700	410	1820	142
B-DRY 200	G1''	200	157,0	700	450	1600	180
B-DRY 250	G1''	260	204,0	700	450	1850	220
B-DRY 300	G1 1/2''	320	251,0	900	530	1620	255
B-DRY 400	G1 1/2''	410	321,5	900	530	1870	275
B-DRY 600	G1 1/2''	590	462,5	850	700	1940	355
B-DRY 800	G2''	770	603,5	1000	710	1980	470
B-DRY 1000	G2''	1000	784,0	1050	710	1980	560

Voltage, frequency	230V, 50/60 Hz
Power consumption	<60 W
Protection class	IP 65
Filter (inlet)*	super fine - 0,01 µm
Filter (outlet)	dust filter; 1 µm
DPD control	optional
Input for stand-by	standard

DEW POINT - CORRECTION FACTORS - C_D			
Operat. temperature [°C]	-25	-40	-70
Operat. temperature [F]	-13	-40	-94
Correction factor C_D	1,1	1	0,7

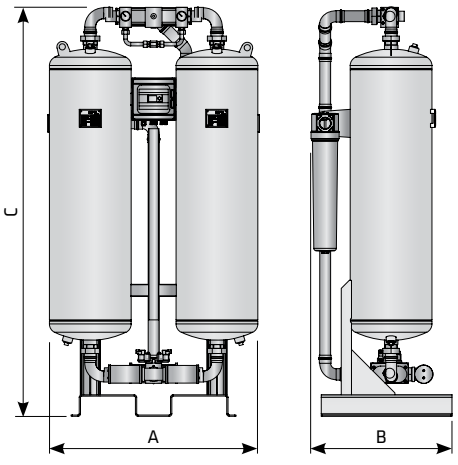

OPERATING TEMPERATURE - CORRECTION FACTORS - C_{OT}								
Operat. temperature [°C]	25	30	35	40	45	50	55	60
Operat. temperature [F]	77	86	95	104	113	122	131	140
Correction factor C_{OT}	1	1	1	0,97	0,87	0,80	0,64	0,51

OPERATING PRESSURE - CORRECTION FACTORS - C_{OP}															
Operating pressure [bar]	2	3	4	5	6	7	8	9	10	11	12	13	14	15	16
Operating pressure [psi]	29	44	58	72	87	100	115	130	145	160	174	189	203	218	232
Correction factor C_{OP}	0,38	0,5	0,63	0,75	0,88	1	1,13	1,25	1,38	1,50	1,63	1,75	1,88	2,00	2,13

(1) Refers to 1bar(a) and 20°C at 7 bar operating pressure, inlet temperature 35°C and pressure dew point at outlet -40°C.

(2) Outlet flow refers to typical assumption during regeneration phase for operating at nominal inlet flow conditions. Outlet flow includes average air losses of approximately 17,3 %.

* If dryer is supplied without inlet filter compressed air class 1 (ISO 8753-1) for solid particles and oil should be provided to the inlet of the dryer.

F-DRY SERIES HEATLESS REGENERATED ADSORPTION DRYERS

operating pressure	**4** to **16** bar
operating temp.range	**1,5** to **60** °C
pressure dew points	**-40**°C **(-25**°C **/ -70**°C**)**
flow rate	**1200** to **6500** Nm³/h

APPLICATIONS

- compressed air systems

DESCRIPTION

F-DRY adsorption dryers are designed for continuous separation of water vapour from the compressed air thus reducing the pressure dew point. F-DRY series dryer consists of two columns, filled with desiccant beds, controller with LCD display, valves, manometers, support construction and suitable filter housings with the required filter element. Adsorption takes place under pressure in the first column while the second column regenerates with a portion of already dried compressed air at ambient pressure.

When the first column is saturated to a certain level column switch-over is carried out and the process of adsorption continues in the second column without any drop of pressure at the outlet of the dryer. Regeneration of saturated desiccant is possible because a small portion of already dry compressed air is decompressed and when expanded it becomes extremely dry.

This portion of extremely dry decompressed air also called “purge air” is then fed through the saturated column in the reverse flow direction in order to remove the adsorbed water molecules from the desiccant and release them back to the ambient.

TECHNICAL DATA

Type	Connection IN/OUT	Nominal volume flow		Dimensions			Mass
		Inlet[1]	Outlet[2]				
	DN	[Nm³/h]	[Nm³/h]	A [mm]	B [mm]	C [mm]	kg
F-DRY 1200	DN50	1200	936	1400	600	2050	650
F-DRY 1500	DN65	1500	1170	1500	650	2100	850
F-DRY 2000	DN65	2000	1560	1600	750	2150	950
F-DRY 2500	DN80	2500	1950	1750	800	2250	1100
F-DRY 3000	DN80	3000	2340	1900	850	2250	1500
F-DRY 3750	DN100	3750	2925	2100	950	2350	2000
F-DRY 5000	DN100	5000	3900	2250	1050	2650	2450
F-DRY 6500	DN125	6500	5070	2450	1100	2850	3000

Voltage, frequency	230V, 50/60 Hz
Power consumption	<60 W
Protection class	IP 65
Filter (inlet)*	super fine - 0,01 µm
Filter (outlet)	dust filter; 1 µm
DPD control	optional
Input for stand-by	standard

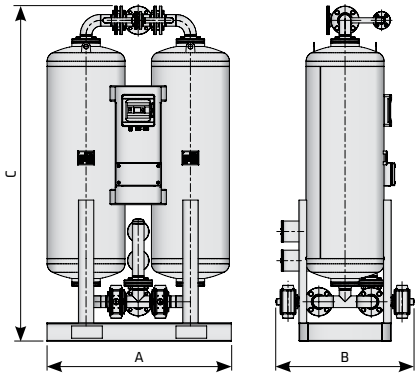

OPERATING PRESSURE - CORRECTION FACTORS - C_{OP}

Operating pressure [bar]	2	3	4	5	6	7	8	9	10	11	12	13	14	15	16
Operating pressure [psi]	29	44	58	72	87	100	115	130	145	160	174	189	203	218	232
Correction factor C_{OP}	0,38	0,5	0,63	0,75	0,88	1	1,13	1,25	1,38	1,50	1,63	1,75	1,88	2,00	2,13

OPERATING TEMPERATURE - CORRECTION FACTORS - C_{OT}

Operat. temperature [°C]	25	30	35	40	45	50	55	60
Operat. temperature [F]	77	86	95	104	113	122	131	140
Correction factor C_{OT}	1	1	1	0,97	0,87	0,80	0,64	0,51

DEW POINT - CORRECTION FACTORS - C_D

Operat. temperature [°C]	-25	-40	-70
Operat. temperature [F]	-13	-40	-94
Correction factor C_D	1,1	1	0,7

(1) Refers to 1bar(a) and 20°C at 7 bar operating pressure, inlet temperature 35°C and pressure dew point at outlet -40°C.

(2) Outlet flow refers to typical assumption during regeneration phase for operating at nominal inlet flow conditions. Outlet flow includes average air losses of approximately 17,3 %.

* If dryer is supplied without inlet filter compressed air class 1 (ISO 8753-1) for solid particles and oil should be provided to the inlet of the dryer.

R-DRY SERIES

HEAT REGENERATED ADSORPTION DRYERS

operating pressure	**4** to **11** bar
operating temp.range	**1,5** to **50** °C
pressure dew points	**-40** °C
flow rate	**390** to **20.200** Nm³/h

APPLICATIONS

- compressed air systems

DESCRIPTION

R-DRY 400 - 20000 adsorption dryers are designed for continuous separation of water vapour from compressed air thus reducing dew point. Operation of dryer requires two columns operated alternately. Adsorption takes place under pressure in first column while second column regenerates with a heated ambient air or purge.

A dryer consists of two columns, filled with desiccant beads, blower, heater, controller with LCD dicplay, valves, manometers, and support construction. Proven robust design enables efficient and reliable operation, fast installation and simple maintenance.

DRYER TYPE	REGENERATION	COOLING
BP	blower, ambient air	purge air
BVA	blower, ambient air	blower, vacuum air

Protection class	IP 54
Filter (inlet)	super fine - 0,01 µm
Filter (outlet)	dust filter; 1 µm
Column insulation	optional

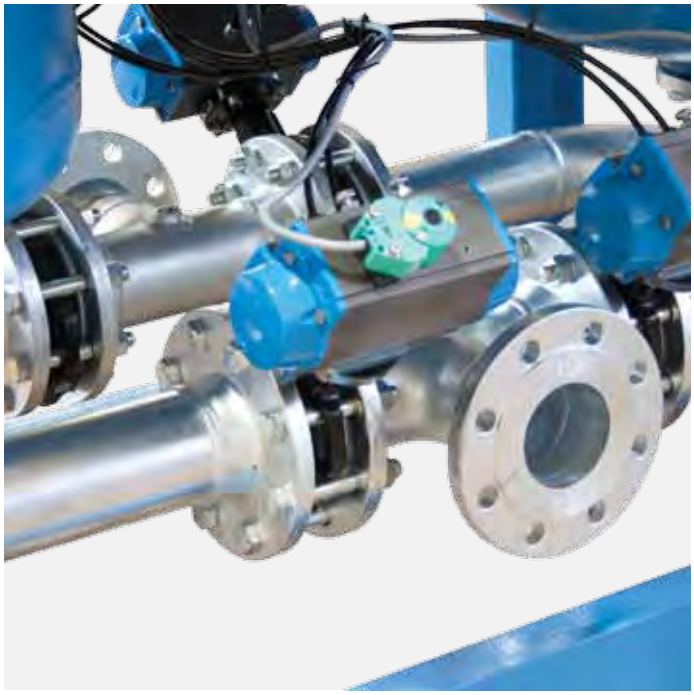

TECHNICAL DATA

Type	Connection IN/OUT	Nominal volume flow Inlet	Dimensions			Mass
	DN	[Nm³/h]	A [mm]	B [mm]	C [mm]	kg
R-DRY 400	DN50	390	1200	1000	2250	1000
R-DRY 600	DN50	590	1300	1100	2350	1400
R-DRY 780	DN50	780	1300	1100	2350	1800
R-DRY 1000	DN50	930	1450	1250	2600	1900
R-DRY 1200	DN80	1.150	1450	1250	2700	2200
R-DRY 1600	DN80	1.600	1550	1350	2750	2600
R-DRY 2000	DN100	1.950	1600	1450	2800	3400
R-DRY 2500	DN100	2.530	2050	1500	2900	3800
R-DRY 3000	DN100	2.990	2050	1550	2950	5000
R-DRY 3600	DN100	3.680	2150	1600	3000	5800
R-DRY 4100	DN125	4.100	2350	1600	3250	7000
R-DRY 5000	DN125	4.990	2500	1750	3250	8200
R-DRY 6500	DN150	6.550	2600	2000	3500	10200
R-DRY 7700	DN150	7.700	2900	2000	3600	12000
R-DRY 10000	DN200	10.250	3200	2200	3600	14400
R-DRY 12000	DN200	11.700	4200	2500	3700	16000
R-DRY 14000	DN200	14.800	4500	2600	3750	16800
R-DRY 16000	DN250	16.000	5500	3200	3750	18500
R-DRY 18000	DN250	18.200	6000	3500	3750	20000
R-DRY 20000	DN250	20.200	6000	3800	3750	23000

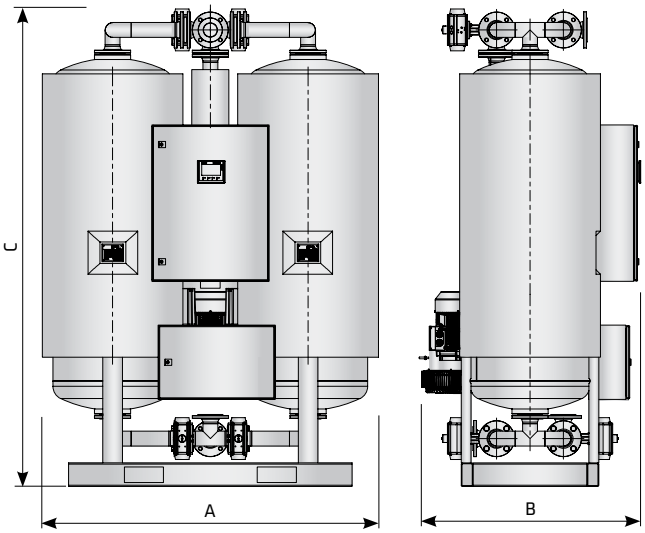

OPERATING PRESSURE - CORRECTION FACTORS - C_{OP}										
Operating pressure [bar]	2	3	4	5	6	7	8	9	10	11
Operating pressure [psi]	29	44	58	72	87	100	115	130	145	160
Correction factor C_{OP}	0,38	0,5	0,63	0,75	0,88	1	1,13	1,25	1,38	1,50

OPERATING TEMPERATURE - CORRECTION FACTORS - C_{OT}						
Operat. temperature [°C]	25	30	35	40	45	50
Operat. temperature [F]	77	86	95	104	113	122
Correction factor C_{OT}	1	1	1	0,97	0,87	0,80

(1) Refers to 1bar(a) and 20°C at 7 bar operating pressure, inlet temperature 35°C and pressure dew point at outlet -40°C.

HP-DRY SERIES

HIGH PRESSURE HEATLESS REGENERATED ADSORPTION DRYERS

operating pressure	**50, 100, 250, 400** bar
operating temp.range	**1,5** to **50** °C
pressure dew points	**-40**°C
flow rate	**50** to **1600** Nm³/h

APPLICATIONS

- compressed air systems

DESCRIPTION

HP-DRY adsorption dryers have been designed for continuous separation of water vapour from compressed air thus reducing dew point. Operation of the dryer requires two columns operated alternately. Adsorption takes place under pressure in the first column while the second column regenerates with a portion of already dried compressed air at ambient pressure.

Dryers consists from control valves, controller with LED display and two columns filled with desiccant. Springs in the columns make sure that the desiccant beads will not move during operation. Proven robust design enables efficient and reliable operation, fast installation and simple maintenance.

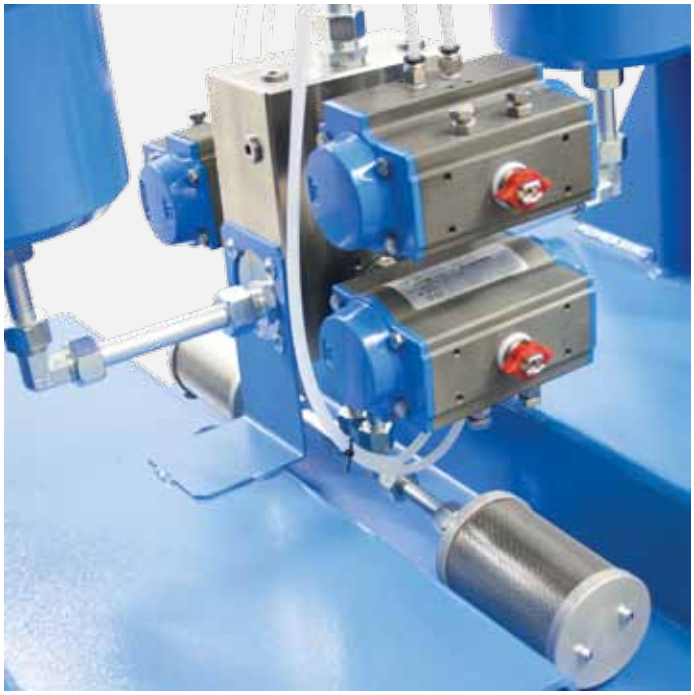

50 bar version		
Type	Connection IN/OUT	Inlet flow (1)
	''	[Nm³/h]
HP-DRY 050 PN50	G 3/8''	50
HP-DRY 100 PN50	G 3/8''	100
HP-DRY 150 PN50	G 3/8''	150
HP-DRY 250 PN50	G 3/8''	250
HP-DRY 350 PN50	G 1/2''	350
HP-DRY 500 PN50	G 1/2''	500
HP-DRY 650 PN50	G 1/2''	650

OPERATING PRESSURE 50 bar - CORRECTION FACTORS - C_{OP} (35°C; 100 bar)						
Operating pressure [bar]	20	30	35	40	45	50
Correction factor C_{OP}	0,41	0,61	0,71	0,81	0,90	1

100 bar version		
Type	Connection IN/OUT	Inlet flow (1)
	''	[Nm³/h]
HP-DRY 050 PN100	G 3/8''	50
HP-DRY 100 PN100	G 3/8''	100
HP-DRY 150 PN100	G 3/8''	150
HP-DRY 250 PN100	G 3/8''	250
HP-DRY 350 PN100	G 1/2''	350
HP-DRY 500 PN100	G 1/2''	500
HP-DRY 650 PN100	G 1/2''	650
HP-DRY 800 PN100	G 1/2''	800

OPERATING PRESSURE 100 bar - CORRECTION FACTORS - C_{OP} (35°C; 100 bar)						
Operating pressure [bar]	50	60	70	80	90	100
Correction factor C_{OP}	0,50	0,60	0,70	0,80	0,90	1,00

250 bar version		
Type	Connection IN/OUT	Inlet flow (1)
	''	[Nm³/h]
HP-DRY 050 PN250	G 3/8''	50
HP-DRY 100 PN250	G 3/8''	100
HP-DRY 150 PN250	G 3/8''	150
HP-DRY 250 PN250	G 3/8''	250
HP-DRY 350 PN250	G 1/2''	350
HP-DRY 500 PN250	G 1/2''	500
HP-DRY 650 PN250	G 1/2''	650
HP-DRY 800 PN250	G 1/2''	800
HP-DRY 1000 PN250	G 1/2''	1000
HP-DRY 1200 PN250	G 1/2''	1200
HP-DRY 1400 PN250	G 1/2''	1400

OPERATING PRESSURE 50 bar - CORRECTION FACTORS - C_{OP} (35°C; 250 bar)						
Operating pressure [bar]	110	130	160	190	220	250
Correction factor C_{OP}	0,44	0,52	0,64	0,76	0,88	1,00

400 bar version		
Type	Connection IN/OUT	Inlet flow (1)
	''	[Nm³/h]
HP-DRY 100 PN400	G 3/8''	100
HP-DRY 150 PN400	G 3/8''	150
HP-DRY 250 PN400	G 3/8''	250
HP-DRY 350 PN400	G 1/2''	350
HP-DRY 500 PN400	G 1/2''	500
HP-DRY 650 PN400	G 1/2''	650
HP-DRY 800 PN400	G 1/2''	800
HP-DRY 1000 PN400	G 1/2''	1000
HP-DRY 1200 PN400	G 1/2''	1200
HP-DRY 1400 PN400	G 1/2''	1400
HP-DRY 1600 PN400	G 1/2''	1600

OPERATING PRESSURE 50 bar - CORRECTION FACTORS - C_{OP} (35°C; 400 bar)							
Operating pressure [bar]	250	275	300	325	350	375	400
Correction factor C_{OP}	0,63	0,69	0,75	0,81	0,88	0,94	1,00

(1) Refers to 1bar(a) and 20°C at 7 bar operating pressure , inlet temperature 35°C and pressure dew point at outlet -40°C

SORBEO

ADSORBENTS

DESCRIPTION

Sorbeo type adsorbents are highly porous materials suitable for use in many adsorption applications. Adsorbents are available in several pack sizes.
For detail specification please refer to technical datasheet of specific adsorbent.

Molecular sieve 3A - drying of unsaturated hydrocarbons

Model	Shape	Bulk density	Package	Mass
SORBEO MS3-S	Granule 2,5mm - 5,0mm	0,7 kg/l	5,8 L container	4 kg
SORBEO MS3-M	Granule 2,5mm - 5,0mm	0,7 kg/l	16,6 L container	11,5 kg
SORBEO MS3-L	Granule 2,5mm - 5,0mm	0,7 kg/l	35,4 L container	24 kg
SORBEO MS3-XL	Granule 2,5mm - 5,0mm	0,7 kg/l	216,5 L barrel	150 kg
SORBEO MS3-XXL	Granule 2,5mm - 5,0mm	0,7 kg/l	4 x barrel	600 kg

Molecular sieve 4A - drying of compressed air and other gases

Model	Shape	Bulk density	Package	Mass
SORBEO MS4-S	Granule 2,5mm - 5,0mm	0,7 kg/l	5,8 L container	4 kg
SORBEO MS4-M	Granule 2,5mm - 5,0mm	0,7 kg/l	16,6 L container	11,5 kg
SORBEO MS4-L	Granule 2,5mm - 5,0mm	0,7 kg/l	35,4 L container	24 kg
SORBEO MS4-XL	Granule 2,5mm - 5,0mm	0,7 kg/l	220 L barrel	150 kg
SORBEO MS4-XXL	Granule 2,5mm - 5,0mm	0,7 kg/l	Big bag	800 kg

Molecular sieve 10A - drying of purification gases and liquids

Model	Shape	Bulk density	Package	Mass
SORBEO MS10-S	Granule 2,5mm - 5,0mm	0,64 kg/l	5,8 L container	3,5 kg
SORBEO MS10-M	Granule 2,5mm - 5,0mm	0,64 kg/l	16,6 L container	10,5 kg
SORBEO MS10-L	Granule 2,5mm - 5,0mm	0,64 kg/l	35,4 L container	22 kg
SORBEO MS10-XL	Granule 2,5mm - 5,0mm	0,64 kg/l	216,5 L barrel	130 kg
SORBEO MS10-XXL	Granule 2,5mm - 5,0mm	0,64 kg/l	4x barrel	520 kg

Activated Alumina - drying of compressed air

Model	Shape	Bulk density	Package	Mass
SORBEO AA-S	Granule 2,0mm - 5,0mm	0,77 kg/l	5,8 L container	4 kg
SORBEO AA-M	Granule 2,0mm - 5,0mm	0,77 kg/l	16,6 L container	12 kg
SORBEO AA-L	Granule 2,0mm - 5,0mm	0,77 kg/l	35,4 L container	27 kg
SORBEO AA-XL	Granule 2,0mm - 5,0mm	0,77 kg/l	220 L barrel	170 kg
SORBEO AA-XXL	Granule 2,0mm - 5,0mm	0,77 kg/l	Big bag	907 kg

Silica Gel SGW - drying of compressed air; water resistant

Model	Shape	Bulk density	Package	Mass
SORBEO SGW-S	Granule 2,0mm - 5,0mm	0,45 kg/l	5,8 L container	2,5 kg
SORBEO SGW-M	Granule 2,0mm - 5,0mm	0,45 kg/l	16,6 L container	7 kg
SORBEO SGW-L	Granule 2,0mm - 5,0mm	0,45 kg/l	35,4 L container	15 kg
SORBEO SGW-XL	Granule 2,0mm - 5,0mm	0,45 kg/l	220 L barrel	100 kg
SORBEO SGW-XXL	Granule 2,0mm - 5,0mm	0,45 kg/l	4x barrel	400 kg

Silica Gel SGR - drying of compressed air

Model	Shape	Bulk density	Package	Mass
SORBEO SGR-S	Granule 2,0mm - 5,0mm	0,7 kg/l	5,8 L container	4 kg
SORBEO SGR-M	Granule 2,0mm - 5,0mm	0,7 kg/l	16,6 L container	11,5 kg
SORBEO SGR-L	Granule 2,0mm - 5,0mm	0,7 kg/l	35,4 L container	24 kg
SORBEO SGR-XL	Granule 2,0mm - 5,0mm	0,7 kg/l	220 L barrel	150 kg
SORBEO SGR-XXL	Granule 2,0mm - 5,0mm	0,7 kg/l	Big bag	500 kg

Activated Carbon - removal of oil vapours, smells, odours from compressed air

Model	Shape	Bulk density	Package	Mass
SORBEO AC-S	Pellet 3 mm	0,5 kg/l	5,8 L container	2,5 kg
SORBEO AC-M	Pellet 3 mm	0,5 kg/l	16,6 L container	8 kg
SORBEO AC-L	Pellet 3 mm	0,5 kg/l	35,4 L container	17 kg
SORBEO AC-XL	Pellet 3 mm	0,5 kg/l	220 L barrel	110 kg

Catalyst - catalytic oxidation of CO to CO_2

Model	Shape	Bulk density	Package	Mass
SORBEO HC-S	Granule 3 mm	0,9 kg/l	5,8 L container	5 kg
SORBEO HC-M	Granule 3 mm	0,9 kg/l	16,6 L container	14 kg
SORBEO HC-L	Granule 3 mm	0,9 kg/l	35,4 L container	31 kg
SORBEO HC-XL	Granule 3 mm	0,9 kg/l	220 L barrel	198 kg

TAC SERIES

ACTIVATED CARBON TOWER

operating pressure	**0** to **16** bar
operating temp.range	**1,5** to **45** °C

Stainless steel version available on request.

High pressure version available on request.

APPLICATIONS

- automotive
- electronics
- food & beverage
- chemical
- petrochemical
- plastics
- paint
- general industrial application

DESCRIPTION

TAC activated carbon towers have been developed for separating oil vapours from compressed air (dry type separation).

TAC series is made from high quality carbon steel. Flow distributors ensure uniform distribution of air flow through activated carbon bed. Oil vapours as well as some other hydrocarbons are separated due to adsorption process.

Super fine coalescing filter is required upstream TAC and 1 µm dust filter is recommended downstream to intercept activated carbon dust. High pressure version is available on request.

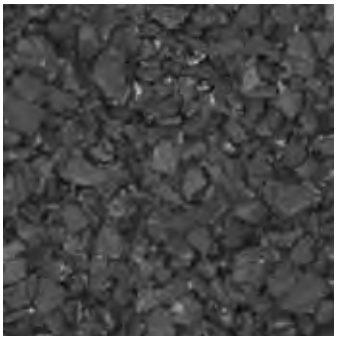

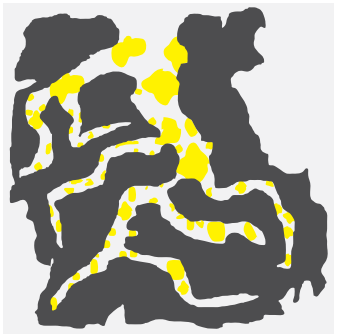

TECHNICAL DATA

Filter housing size	Pipe size	Operating pressure	Flow rate at 7 bar(g), 20 °C		Dimensions [mm]			Mass	Cartridge number
	inch	bar	Nm³/h	scfm	A	B	C	kg	
TACm 6	3/8	16	6	3,5	404	188	100	3,5	1 x ø80
TACm 12	3/8	16	12	7	638	188	100	5,3	2 x ø80
TACm 23	3/8	16	24	14,1	1106	188	100	6,5	4 x ø80
TACm 35	3/8	16	36	21,1	1574	188	100	12	6 x ø80
TACm 56	1/2	16	60	35,3	1106	270	148	15	4 x ø129
TACm 70	1/2	16	75	44,1	1340	270	148	18	5 x ø129
TACm 105	1/2	16	105	61,8	1808	270	148	22	7 x ø129
TAC 10	3/4	16	100	59	1369	300	261	44	-
TAC 18	1	16	175	103	1380	300	315	51	-
TAC 30	1	16	275	162	1391	338	370	69	-
TAC 47	1 1/2	16	475	280	1466	432	449	110	-
TAC 94	2	16	900	530	1485	574	580	186,5	-
TAC 150	2	16	1500	882	1586	712	724	310	-
TAC 200	3	16	2200	1294	1631	910	852	440	-
TAC 240	3	16	2800	1646	1656	1010	952	586	-
					quality class - solids (ISO 8573-1)				-
					quality class - water (ISO 8573-1)				-
					quality class - oils (ISO 8573-1)				0/1
					pressure drop - new element-dry [mbar / psi]				20 / 0,29
					filter media				act. carbon
					residual oil vapour content (nominal) [mg/m³]				<0,003

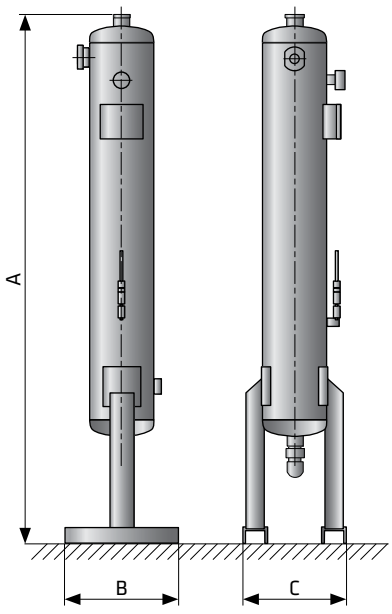

CORRECTION FACTORS

Operating pressure [bar]	2	3	4	5	6	7	8	9	10	11	12	13	14	15	16
Operating pressure [psi]	29	44	58	72	87	100	115	130	145	160	174	189	203	218	232
Correction factor	0,38	0,5	0,63	0,75	0,88	1	1,13	1,25	1,38	1,50	1,63	1,75	1,88	2,0	2,13

CORRECTION FACTORS

Operating temperature [°C]	20	25	30	35	40	45	50	55	60
Correction factor	1	0,98	0,97	0,92	0,86	0,75	0,60	-	-

Replace activated carbon every 12 months or sooner if required. Check residual oil content with oil indicator monthly.

M-DRY SERIES

MEMBRANE DRYERS

operating pressure	**0** to **12** bar
operating temp.range	**1,5** to **60** °C
pressure dew points	**+15, +3, -20, -40**°C
flow rate	**3** to **180** Nm³/h

APPLICATIONS

- automotive painting
- industrial "Point-of-use" drying
- low dew point instrument air
- pneumatics
- medical air
- analytical equipment
- pressurizing electrical cabinets

DESCRIPTION

M-DRY membrane air dryers have been developed for high efficient removal of water vapours from compressed air. Super fine coalescing filter is required upstream.

TECHNICAL DATA

Model	Pipe size	Operating pressure	Flow rate *		DImensions [mm]			
	inch	bar	Nm³/h	scfm	A	B	C	D
M-DRY 3	1/4	12	3	1,8	224	43,7	325	175
M-DRY 6	1/4	12	6	3,5	325	43,7	453	175
M-DRY 9	1/4	12	9	5,3	427	43,7	555	175
M-DRY 12	1/4	12	12	7,1	503	43,7	611	175
M-DRY 18	1/2	12	18	10,6	312	61	476	208
M-DRY 24	1/2	12	24	14,1	376	61	540	208
M-DRY 32	1/2	12	36	21,2	465	61	661	208
M-DRY 44	1/2	12	48	28,3	592	61	788	208
M-DRY 63	1/2	12	63	37,1	411	89	607	208
M-DRY 90	1/2	12	90	53	551	89	755	284
M-DRY 123	1/2	12	123	72,4	551	89	755	284
M-DRY 180	1	12	180	106,6	607	114	1805	290

*At 7 bar, inlet dew point +35 °C, outlet dew point +15 °C

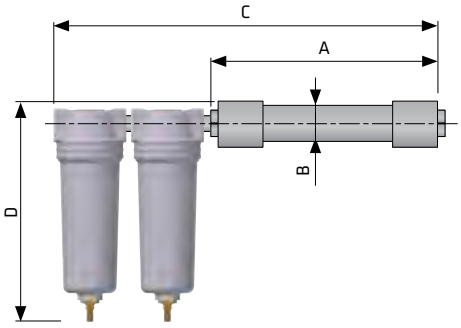

PERFORMANCE DATA

Outlet dew point	15 °C		3 °C		-20 °C		-40 °C	
Purge air consumption	10 %		14 %		21 %		29 %	
% Water removal	69,70 %		86,53 %		98,20 %		99,77 %	
	Nm³/h	scfm	Nm³/h	scfm	Nm³/h	scfm	Nm³/h	scfm
MFP 3	3	1,8	2,2	1,3	1,4	0,8	1,02	0,6
MFP 6	6	3,5	4,3	2,5	2,8	1,7	2	1,2
MFP 9	9	5,3	6,4	3,8	4,3	2,5	3,1	1,8
MFP 12	12	7,1	8,5	5,0	5,7	3,3	4,1	2,4
MFP 18	18	10,6	12,8	7,5	8,5	5,0	6,2	3,6
MFP 24	24	14,1	17	10,1	11,3	6,7	8,2	4,8
MFP 32	36	21,2	25,6	15,1	17	10	12,4	7,3
MFP 44	48	28,3	34,1	20,1	22,7	13,4	16,4	9,7
MFP 63	63	37,1	44,9	26,4	29,7	17,5	21,5	12,7
MFP 90	90	53	67,3	39,6	43,8	25,8	31,1	18,3
MFP 123	123	72,4	91,7	54,0	58,8	34,6	42,6	25,1
MFP 180	180	106,6	128,1	75,4	85,5	50,3	61,5	36,2

At 7 bar, inlet dew point +35 °C, data refers on inlet flow capacity

CORRECTION FACTORS

Operating pressure [bar]	4	5	6	7	8	9	10	11	12
Operating pressure [psi]	58	72	87	100	115	130	145	160	174
C_{OP}	0,41	0,56	0,76	1	1,22	1,48	1,76	1,86	2,22

quality class - solids (ISO 8573-1)	-
quality class - water (ISO 8573-1)	2*
quality class - oils (ISO 8573-1)	-
differential pressure [mbar / psi]	200 / 2,9
required inlet air quality (particles)	class 1
required inlet air quality (oil)	class 1 <0,01 mg/m³

*Outlet dew point depend on inlet conditions and flow. For specific operating conditions check tables.

ACA SERIES

AIR COOLED AFTERCOOLERS

operating pressure	**7** bar
inlet air temperature	**120** °C
max. inlet air temp.	**170** °C
flow rate	**66** to **4500** Nm³/h

APPLICATIONS

- compressed air systems

DESCRIPTION

Air cooled aftercoolers series ACA have been designed to reduce compressed air temperature and water vapour dew point in compressed air system. High efficiency axial fan forces ambient air over the heat exchangers copper tubes supported by aluminium fins, which provides the necessary cooling effect. The compressed air is cooled down to approximately 10°C above ambient temperature.

ACA aftercoolers ensures the maximum performance and protection of all equipment, such refrigeration dryers, adsorption dryers and filters, positioned downstream of this unit.

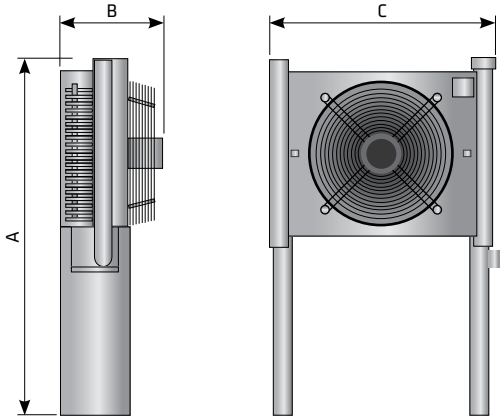

TECHNICAL DATA

Model	Flow rate		Pipe size	Power supply	Fan	Dimensions			Mass
fixed bundle	Nm³/h	scfm		ph/V/Hz	ø mm/ W	A [mm]	B [mm]	C [mm]	kg
ACA 003	66	39	G 1"	1/230/50	ø250-45W	850	300	715	19
ACA 007	126	74	G 1"	1/230/50	ø250-45W	850	300	715	20
ACA 010	222	131	G 1 1/2"	3/400/50	ø350-110W	990	310	845	27
ACA 018	294	173	G 1 1/2"	3/400/50	ø400-130W	990	310	845	29
ACA 030	390	230	G 2"	3/400/50	ø500-750W	1175	440	980	44
ACA 047	522	307	G 2"	3/400/50	ø500-750W	1175	440	980	48
ACA 070	774	456	G 2"	3/400/50	ø600-370W	1325	490	1130	61
ACA 094	990	583	G 2 1/2"	3/400/50	ø600-370W	1325	490	1130	66
ACA 150	1260	742	DN100	3/400/50	ø800-1470W	1800	660	1590	127
ACA 175	1560	918	DN100	3/400/50	ø800-1470W	1800	660	1590	143
ACA 240	1890	1112	DN100	3/400/50	ø800-1470W	1800	790	1560	148
ACA 300	2520	1483	DN100	3/400/50	ø800-1470W	2000	795	1740	166
ACA 450	3090	1819	DN125	3/400/50	2x ø800-1470W	2090	830	1850	212
ACA 600	4500	2649	DN125	3/400/50	2x ø800-1470W	2300	850	2010	315

ACW SERIES

WATER COOLED AFTERCOOLERS

operating pressure	**0** to **16** bar
operating temp.range	**1,5** to **200** °C

APPLICATIONS

- Automotive
- Electronics
- Food & Beverage
- Chemical
- Petrochemical
- Plastics
- Paint
- General industrial application

DESCRIPTION

ACW – Water-cooled aftercooler series has been designed to reduce compressed air temperature thus water vapour content in compressed air system. Hot compressed air/gas passes through the tubes. Cooling water passes around the tubes in counter flow.
ACW aftercooler ensures the maximum performance and protection of all equipment, such refrigeration dryers, adsorption dryers and filters, positioned downstream of this unit.

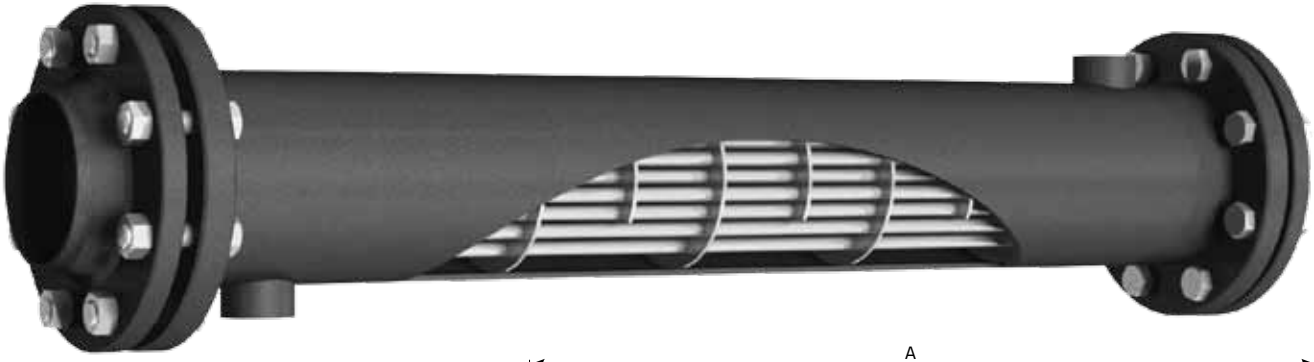

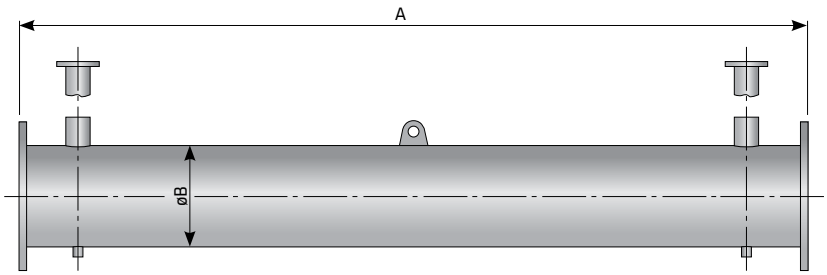

TECHNICAL DATA

Model	Connections		Flow capacity[1]		Operating pressure	Dimensions	
fixed bundle	Air	Water	Nm³/h	scfm	bar	A [mm]	B [mm]
ACW 010 F	DN50	DN20	132	78	0 - 16	806	60,3
ACW 018 F	DN50	DN20	235	138	0 - 16	816	60,3
ACW 030 F	DN50	DN20	367	216	0 - 16	816	60,3
ACW 047 F	DN50	DN20	661	389	0 - 16	870	60,3
ACW 070 F	DN50	DN20	955	562	0 - 16	870	60,3
ACW 094 F	DN80	DN20	1323	779	0 - 16	1500	88,9
ACW 150 F	DN80	DN20	2205	1298	0 - 16	1510	88,9
ACW 240 F	DN125	DN32	3087	1817	0 - 16	1300	139,7
ACW 300 F	DN125	DN32	3969	2336	0 - 16	1300	139,7
ACW 450 F	DN200	DN50	7056	4153	0 - 16	1300	219
ACW 600 F	DN200	DN65	8967	5278	0 - 16	1300	219
ACW 900 F	DN250	DN80	11025	6489	0 - 10	1300	273
ACW 1200 F	DN300	DN80	16170	9517	0 - 10	1300	323,9
ACW 1500 F	DN400	DN100	22050	12978	0 - 10	1300	406
ACW 1800 F	DN400	DN150	26460	15574	0 - 10	1300	406
ACW 2500 F	DN450	DN200	33810	19900	0 - 10	1300	457
ACW 3000 F	DN500	DN200	45570	26821	0 - 10	1300	508

[1] Refers to 1 bar and 20°C at 7 bar operating pressure and inlet temperature 120°C

OMD SERIES

REFRIGERATED AIR DRYERS

operating pressure	up to **14** bar
max. ambient temp.	**45** °C
pressure dew points	**3** °C
flow rate	**19** to **8800** Nm^3/h
max. inlet air temp.	**55** °C

APPLICATIONS

- compressed air systems
- sized to match standard compressor outputs

DESCRIPTION

The OMD series has been designed and built to expedite inspection and maintenance operations. The easily removed panels offer immediate access to the operating components of the unit. The cleaning of the solenoid drain valve does not require the usage of service tools thanks to the quick "bayonet" valve sistem and the innovative coil clamp.

OMD dryers achieve excellent performance even in instances of high ambient and high inlet temperatures. The highly efficient and ultra compact heat exchanger is able to operate effectively in ambient temperatures up to 45°C and inlet temperatures of 55°C, ensuring a reduced compressed air pressure drop.

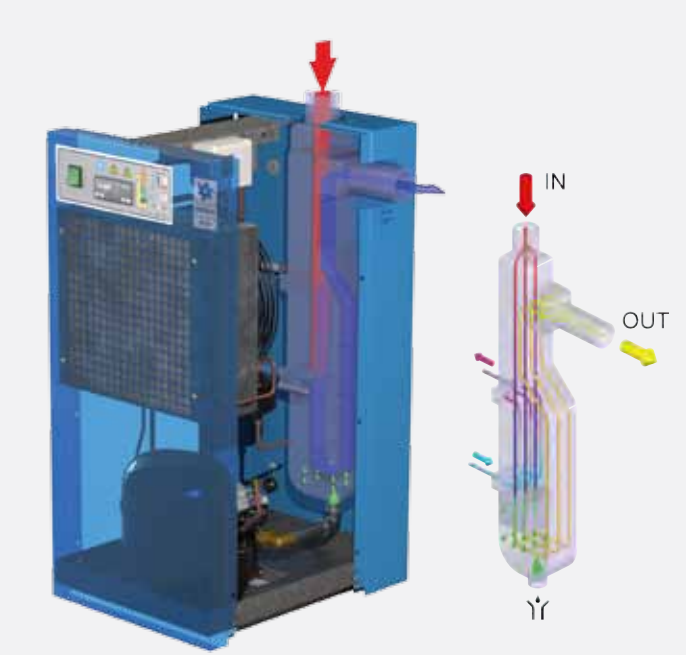

TECHNICAL DATA

Type	Air flow [m³/h]	Power supply	Controller	Dimensions A [mm]	B [mm]	C [mm]	Air connections	Condensate drain	Ts Thermal switch	PA high pressure switch	PB low pressure switch	Mass net-gross [kg]	Refrigerant
OMD 20	19	1/230/50-60	DMC16	310	345	435	G 3/8" BSP-F	EMD12	✓	-	-	21-23	R 134a
OMD 35	33	1/230/50-60		370	515	475	G 1/2" BSP-F	EMD12	✓	-	-	25-27	R 134a
OMD 50	52	1/230/50-60		370	515	475	G 1/2" BSP-F	EMD12	✓	-	-	26-28	R 134a
OMD 65	66	1/230/50-60		370	515	475	G 1/2" BSP-F	EMD12	✓	-	-	28-30	R 134a
OMD 100	98	1/230/50-60		370	515	475	G 1/2" BSP-F	EMD12	✓	-	-	32-34	R 134a
OMD 135	137	1/230/50-60		345	420	740	G 1" BSP-F	EMD12	✓	-	-	34-38	R 134a
OMD 175	175	1/230/50		345	445	740	G 1 1/4" BSP-F	EMD12	✓	-	-	39-43	R 134a
OMD 235	235	1/230/50		345	445	740	G 1 1/4" BSP-F	EMD12	✓	-	-	40-44	R407C
OMD 280	284	1/230/50		485	455	825	G 1 1/4" BSP-F	EMD12	✓	-	-	41-45	R407C
OMD 330	333	1/230/50		555	580	885	G 1 1/2" BSP-F	EMD12	✓	-	-	54-66	R407C
OMD 410	410	1/230/50		555	580	885	G 1 1/2" BSP-F	EMD12	✓	-	-	56-68	R407C
OMD 570	573	1/230/50		555	625	975	G 2" BSP-F	EMD12	✓	✓	-	94-107	R407C
OMD 710	710	1/230/50		555	625	975	G 2" BSP-F	EMD12	✓	✓	-	96-109	R407C
OMD 920	917	1/230/50		665	725	1.105	G 2 1/2" BSP-F	EMD12	✓	✓	✓	144-164	R407C
OMD 1050	1037	3/400/50	DMC24	645	920	1.100	G 2 1/2" BSP-F	EMD12	✓	✓	✓	170-190	R407C
OMD 1200	1201	3/400/50		645	920	1100	G 2 1/2" BSP-F	EMD12	✓	✓	✓	172-192	R407C
OMD 1350	1365	3/400/50		790	1.000	1.465	DN80 PN16	OBM32	✓	✓	✓	242-283	R407C
OMD 1900	1911	3/400/50		790	1.000	1.465	DN80 PN16	OBM32	✓	✓	✓	276-317	R407C
OMD 2200	2239	3/400/50		790	1.000	1.465	DN80 PN16	OBM32	✓	✓	✓	311-352	R407C
OMD 2600	2621	3/400/50		1.135	1.205	1.750	DN100 PN16	2xOBM32	✓	✓	✓	463-516	R407C
OMD 3350	3385	3/400/50		1.135	1.205	1.750	DN100 PN16	2xOBM32	✓	✓	✓	538-591	R407C
OMD 4400	4423	3/400/50		1.135	1.205	1.750	DN100 PN16	2xOBM32	✓	✓	✓	612-665	R407C
OMD 5400	5400	3/400/50	DMC24	1.300	1750	1810	DN150 PN16	3xOBM32	✓	✓	✓	830-920	R407C
OMD 6600	6624	3/400/50		1.300	1750	1810	DN150 PN16	3xOBM32	✓	✓	✓	940-1030	R407C
OMD 7200	7200	3/400/50		1.300	1750	1810	DN200 PN16	4xOBM32	✓	✓	✓	1055-1145	R407C
OMD 8800	8800	3/400/50		1.300	1750	1810	DN200 PN16	4xOBM32	✓	✓	✓	1200-1290	R407C

CORRECTION FACTOR FOR OPERATING PRESSURE CHANGES

Operat. pressure [bar]	4	5	6	7	8	10	12	14
Correction factor	0,77	0,86	0,93	1,00	1,05	1,14	1,21	1,27

CORRECTION FACTOR FOR AMBIENT TEMPERATURE CHANGES

Temperature [°C]	≤25	30	35	40	45
Correction factor	1,00	0,95	0,88	0,79	0,68

CORRECTION FACTOR FOR INLET AIR TEMPERATURE CHANGES

Temperature [°C]	≤30	35	40	45	50	55
Correction factor	1,11	1,00	0,81	0,67	0,55	0,45

CORRECTION FACTOR FOR DEW POINT CHANGES

Temperature [°C]	3	5	7	10
Correction factor	1,00	1,099	1,209	1,385

Data refer to the following nominal condition: Ambient temperature of 25°C, with inlet air at 7 barg and 35°C and 3 °C pressure Dew Point (-20,5°C atmospheric pressure Dew Point).
Max. working condition: Ambient temperature 45°C, inlet air temperature 55°C and inlet air pressure 14 barg (16 barg for OMD 20 ... 100).

OMH SERIES

HIGH INLET TEMPERATURE DRYERS

operating pressure	**14 (16)**bar
operating temp.range	**90** °C
pressure dew points	**7**°C
flow rate	**46** to **256** Nm³/h

APPLICATIONS

- high temperature compressed air systems

DESCRIPTION

OMH is synonymous of quality/performance at high temperature.

It incorporates a dryer and aftercooler in a single unit; its strong point is that it includes all the latest technologies in a compact design without sacrifing perfomance in extreme operating conditions.

The OMH series was designed in the utmost respect for the environment thanks to the use of ecological refrigerant fluids and the choice of recyclable manufacturing materials.

Compressed air treated with OMH dryer series guarantees high quality standards, conforming to ISO 8573.1, in fact they respect Class 6 for residual humidity and Class 3 for maximum concentration of solid contaminants.

TECHNICAL DATA

Type	Air flow [m³/h]	Operating pressure bar	Power supply	Dimensions A [mm]	Dimensions B [mm]	Dimensions C [mm]	Air connections	Mass net-gross [kg]
OMH 45	46	16	1f/230V/50Hz	426	416	650	G 1/2''	29-33
OMH 70	68	16	1f/230V/50Hz	426	416	650	G 1/2''	32-36
OMH 100	103	16	1f/230V/50Hz	426	416	650	G 1/2''	38-42
OMH 140	142	14	1f/230V/50Hz	444	440	900	G 1''	39-43
OMH 180	182	14	1f/230V/50Hz	444	440	900	G 1 1/4''	50-57
OMH 250	256	14	1f/230V/50Hz	469	511	900	G 1 1/4''	53-60

CORRECTION FACTOR FOR OPERATING PRESSURE CHANGES

Operat. pressure [bar]	4	5	6	7	8	10	12	14
Correction factor C_{OP}	0,77	0,86	0,93	1,00	1,05	1,14	1,21	1,27

CORRECTION FACTOR FOR AMBIENT TEMPERATURE CHANGES

Temperature [°C]	≤30	32	35	40	45
Correction factor C_{AT}	1,13	1,08	1,00	0,90	0,80

CORRECTION FACTOR FOR INLET AIR TEMPERATURE CHANGES

Temperature [°C]	≤70	80	90
Correction factor C_{IT}	1,00	0,90	0,89

CORRECTION FACTOR FOR DEW POINT CHANGES

Temperature [°C]	5	7	10
Correction factor C_{DP}	0,75	1,00	1,087

To calculate the correct capacity of a given filter based on actual operating conditions, multiply the nominal flow capacity by the appropriate correction factor(s).
CORRECTED CAPACITY = NOMINAL FLOW CAPACITY x C_{OP} x C_{AT} x C_{IT} x C_{DP}
Data refer to the following nominal conditions: Ambient temperature of 35°C, with inlet air at pressure 7 barg and 70°C and pressure DewPoint 7°C.
Max. operating condition : Ambient temperature 45°C , Inlet air temperature 90°C and Inlet air pressure 14 barg (16 barg for OMH 45-100).

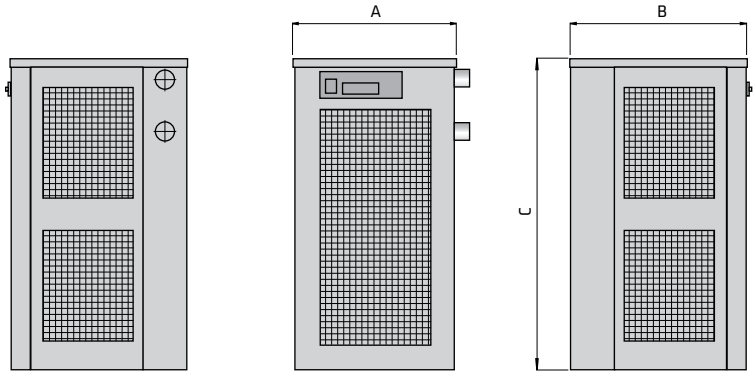

OHP SERIES

HIGH PRESSURE COMPRESSED AIR DRYERS

operating pressure	**50 (45)** bar
operating temp.range	**1,5** to **65** °C
pressure dew points	**3**°C
flow rate	**25** to **5010** Nm³/h

APPLICATIONS

- high pressure compressed air systems

DESCRIPTION

OHP series (high pressure dryers for compressed air systems up to 50 barg) makes the most of manufacturing and functional advantages of brazed plate heat exchangers, which are more suitable for high pressure working conditions (on models OHP 90-3000).

Main features are:
- simple and ergonomic component layouts guarantee functionality and efficiency;
- excellent performance due to low pressure drop and constant pressure Dew Point;
- dryer design is very attractive both aesthetically with a two tone cabinet and practically with a robust casing.

TECHNICAL DATA

Type	Air flow	Max. inlet pressure	Power supply	Dimensions			Zero loss drain (option)	Air connections	Mass net-gross [kg]
	[m³/h]	bar		A [mm]	B [mm]	C [mm]			
OHP 25	25	50	1/230V/50Hz	370	515	475	OBK 1/50	G 3/8'' BSP-F	28-32
OHP 45	45	50	1/230V/50Hz	370	515	475	OBK 1/50	G 3/8'' BSP-F	29-33
OHP 70	72	50	1/230V/50Hz	370	515	475	OBK 1/50	G 3/8'' BSP-F	32-36
OHP 90	90	50	1/230V/50Hz	345	420	740	OBK 1/50	G 3/4'' BSP-F	38-42
OHP 135	135	50	1/230V/50-60Hz	345	420	740	OBK 1/50	G 3/4'' BSP-F	39-43
OHP 180	180	50	1/230V/50Hz	485	455	825	OBK 1/50	G 3/4'' BSP-F	50-57
OHP 240	240	50	1/230V/50-60Hz	485	455	825	OBK 1/50	G 3/4'' BSP-F	53-60
OHP 315	315	50	1/230V/50Hz	555	580	885	OBK 1/50	G 1'' BSP-F	89-101
OHP 450	450	50	1/230V/50-60Hz	555	580	885	OBK 1/50	G 1'' BSP-F	101-113
OHP 600	615	50	1/230V/50-60Hz	555	580	885	OBK 1/50	G 1'' BSP-F	115-128
OHP 800	810	50	1/230V/50Hz	665	725	1105	OBK 1/50	G 1 1/2'' BSP-F	156-176
OHP 1000	1008	50	1/230V/50-60Hz	665	725	1105	OBK 1/50	G 1 1/2'' BSP-F	190-210
OHP 1250	1260	50	3/400V/50Hz	790	1000	1465	OBK 2/50	G 2'' BSP-F	252-293
OHP 1600	1620	45	3/400V/50Hz	790	1000	1465	OBK 2/50	G 2'' BSP-F	265-306
OHP 2250	2280	45	3/400V/50Hz	790	1000	1465	OBK 2/50	G 2'' BSP-F	391-432
OHP 2400	2430	45	3/400V/50Hz	1135	1205	1750	OBK 2/50	Flange ANSI 3''	444-497
OHP 3000	3030	45	3/400V/50Hz	1135	1205	1750	OBK 2/50	Flange ANSI 3''	461-514
OHP 4000	4020	45	3/400V/50Hz	1135	1205	1750	OBK 2/50	Flange ANSI 3''	486-539
OHP 5000	5010	45	3/400V/50Hz	1135	1205	1750	OBK 2/50	Flange ANSI 3''	552-605

CORRECTION FACTOR FOR OPERATING PRESSURE CHANGES

Operat. pressure [bar]	15	20	25	30	35	40	45	50
Correction factor C_{OP}	0,57	0,7	0,8	0,88	0,94	1	1,05	1,1

CORRECTION FACTOR FOR AMBIENT TEMPERATURE CHANGES

Temperature [°C]	≤25	30	35	40	45	50
Correction factor C_{AT}	1	0,96	0,9	0,82	0,72	0,6

CORRECTION FACTOR FOR INLET AIR TEMPERATURE CHANGES

Temperature [°C]	≤25	30	35	40	45	50	55	60	65
Correction factor C_{IT}	1,2	1,12	1	0,83	0,69	0,59	0,5	0,44	0,39

CORRECTION FACTOR FOR DEW POINT CHANGES

Temperature [°C]	3	5	7	10
Correction factor C_{DP}	1	1,09	1,19	1,37

To calculate the correct capacity of a given filter based on actual operating conditions, multiply the nominal flow capacity by the appropriate correction factor(s).
CORRECTED CAPACITY = NOMINAL FLOW CAPACITY x C_{OP} x C_{AT} x C_{IT} x C_{DP}
Data refers to the following nominal conditions: Ambient temperature of 25°C, with inlet air at pressure 40 barg and 35°C - pressure dew point of 3°C.
Max. operating condition : Ambient temperature 50°C , Inlet air temperature 65°C and inlet air pressure 50 barg (45 barg from OHP 1600).

Measuring equipment

OS 323 & OS 325

DISPLAY / DATA LOGGER

	OS 323	OS 325
Casing:	Size: 118 x 115 x 98 mm Panel size: 92 x 92 mm Protection class: IP65	
Power supply:	230 VAC / 50 Hz (standard) 110 VAC / 60 Hz (on demand)	
Ambient temperature:	0 to 50 °C	
Sensor inputs:	2 inputs for OS flow/dew point sensors 2 inputs for analog sensors (pressure sensor)	
Communication interface:	USB	USB and SD Card port
Alarm:	Red flashing display for pre-set alarm limit 2 alarm relay outputs	
Accuracy:	See sensor specification	
Included:	Wall mountable casing	Wall mountable casing Data logger SD card 4GB USB cable OSM-S Software for data analysis (requires internet connection)

Power supply cable is not included.

OS 215 & OS 220

DEW POINT SENSOR

	OS 215	OS 220
APPLICATION:	Refrigeration dryers	Adsorption & Refrigeration dryers
Measuring range:	Dew point: –20 to 50 °C Relative humidity: 0 to 99,9 % Temperature: -30 to 70 °C	Dew point: –100 to 20 °C Relative humidity: 0 to 99,99 % Temperature: -30 to 70 °C
Pressure range:	–1 to 50 bar	
Accuracy:	Dew point: ± 2 °C	
Response time t90:	0 to –20 °C: 30 sec –20 to 0 °C: 10 sec	< 120 sec (descending), < 30 sec (ascending)
Connection:	M12, 5 pole	
Output signal:	4 to 20 mA, 2-wire	4 to 20 mA, 3-wire or loop powered (2-wire)
Process connection:	G 1/2"	
Ambient temperature:	–20 to 50 °C	
Protection class:	IP65	
Casing:	Process connection: stainless steel Casing: Zinc alloy	
Included:	Power cable with M12 connector (for connection to external display)	

OS 400 & OS 420

ECONOMIC FLOW / CONSUMPTION SENSOR

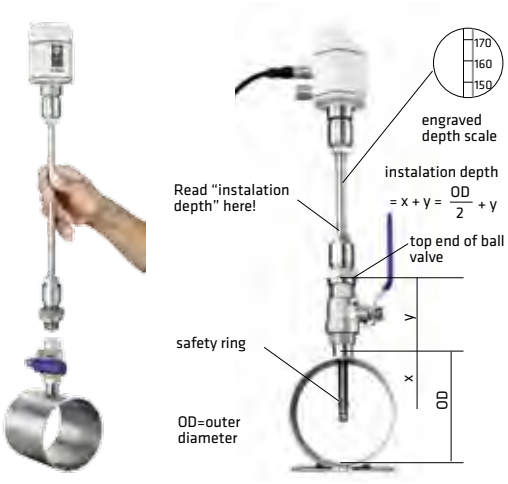

OS 400 Insettion type - installation method

	OS 400 & OS 420
Pressure range:	Up to 16 bar
Accuracy:	max ± (3 % of measured value + 0.3 % full scale) Temperature drift: 0.05 % / °C Pressure drift: 0.5 % / bar
Principle of measurement:	Thermal mass flow
Output signal:	4 to 20 mA, 3-wire
Connection:	M12, 5 pole
Process connection:	BSP thread connections
Ambient temperature:	–30 to 70 °C
Material:	Measuring section: Stainless steel 1.4404 (316L)
Included:	Power cable with M12 connector (for connection to external dispay)

OS 420: Shortened inlet section!
Recommended inlet section length is: l = 15 x Inner pipe diameter

OS 400 insertion type		
Connection size	**Length of shaft**	**Measuring range** at 7 bar(g), 20 °C
inch	mm	m^3/h
G 1/2''	220	depends of pipe

OS 420		
Connection size	**Inner pipe diam.**	**Measuring range** at 7 bar(g), 20 °C
G 3/8''	12,6	0,5 - 60
G 1/2''	16,1	0,5 - 78
G 3/4''	21,7	0,9 - 120
G 1''	27,2	1,5 - 335
G 1 1/2''	41,8	2,8 - 780
G 2''	53	4,5 - 1.440
G 2 1/2''	68,8	5,1 - 1.680
G 3''	80,9	7,1 - 2.760

OS 16 & OS 40

PRESSURE SENSOR

	OS 16	OS 40
Measuring/pressure range:	Up to 16 bar	Up to 40 bar
Accuracy:	0,5 % full scale	
Response time:	1 ms	
Process connection:	G 1/4" thread	
Ambient temperature:	–20 to 85 °C	
Protection class:	IP65	
Casing:	Stainless steel 304L	
Included:	Power cable (for connection to external display)	

OS 550-P6 set

PORTABLE DATA LOGGER, FLOW SENSOR, DEW POINT SENSOR, PRESSURE SENSORS

Consists of:

- 1 x OS550 portable data logger
- 1 x OS400 portable flow sensor
- 1 x OS220 portable dew point sensor with measuring chamber
- 2 x OS16 portable pressure sensor
- 4 x connection cables

	OS 550-P6
Casing:	Size: 265 x 220 x 150 mm Weight: 2,4 kg Protection class: IP65
Power supply:	240 VAC / 50 Hz (standard) 100 VAC / 60 Hz (on demand)
Battery	Internal rechargeable battery / up to 8 hour operations (depends on connected sensors)
Ambient temperature:	0 to 45 °C
Sensor inputs:	2 inputs for OS flow/dew point sensors 2 inputs for modbus sensor modules (RS-485/RTU) 2 inputs for pressure sensors (Process signals 0 to 20 mA, 0 to 10V, Pt100/Pt1000)
Communication interface:	USB and SD Card port
Accuracy:	See sensor specification
Included:	4 channel data recorder, SD card 4 GB, USB cable OSM-S Software for data analysis included (requires internet connection)

OS 120-P

PORTABLE RESIDUAL OIL SENSOR

	OS 120-P
Measuring range:	0,001 to 10,00 mg/m^3
Pressure range:	3 to 10 bar (g)
Medium:	Air: from –20 to 40 °C
Sample flow rate:	< 2 l/min
Output signal:	4 to 20 mA or RS-485, Modbus/RTU, Alarm relay
Sensor:	PID (photoionization detector), requires service once per year
Calculated parameters:	g/m^3, mg/m^3, ppmV, g/kg Dew point, moisture at atmospheric conditions
Ambient temperature:	–20 to 40 °C
Protection class:	IP65
Casing:	PC, Al alloy
Included:	Transport case with accessories for connecion to OS 550-P

OS 502 set

PORTABLE DEW POINT SENSOR

	OS 502 set
Measuring range:	Dew point: –80 to 20 °C Temperature: –30 to 50 °C Pressure: –1 to 15 bar
Operating conditions:	Temperature: 0 to 50 °C Pressure: < 15 bar (g) Humidity: <90 % no condensation
Accuracy:	Dew point: ±2 °Ctd @ –50 °Ctd Temperature: ± 0,3 °C Pressure: ± 0,05 bar
Response time:	–50 -> –10 °Ctd 10 s, –10 -> –50 °Ctd 5 min
Calculated parameters:	g/m³, mg/m³, ppmV, g/kg Dew point, moisture at atmospheric conditions
Process connection:	Quick coupling
Battery life:	6 hours
Included:	Parking / Measuring chamber, Teflon® hose with quick connector, data logger, SD card and Bluetooth, USB charger with USB cable, OS portable printer with BT interface, transport case, OSM-S Software for data analysis (requires internet connection)

OS 530

PORTABLE LEAK DETECTOR FOR PRESSURIZED SYSTEMS

	OS 530			
Measuring range (detection distance):			Diameter	
			0,1 mm	0,2 mm
	Pressure	0,5 bar	2 m	2 m
		5,0 bar	8 m	14 m
Operating frequency:	40 kHz ±2 kHz			
Battery life:	Internal NiMH rechargable, 4-6 hours of operation			
Included:	Noise isolated headset, focus tube and focus tip, battery charger, transport case			

Pressure vessels

TP PED SERIES

PRESSURE VESSELS - PED

operating pressure	**10, 13** bar
operating temp.range	**-10** to **+50** °C

APPLICATIONS

• compressed air systems

DESCRIPTION

Pressure vessels are tanks, designed to store compressed air. On request Pressure vessels can also be designed for any other technical gas. Volume of pressure vessel depends on compressor capacity and on consumption of compressed air.

The supply of pressure vessel includes:
- Anticorrosion protection with basic colour painting and final painting
- CE – certificate
- Revision opening (from type TP200 on)
- Supporting legs
- Connections for optional equipment

CE

TECHNICAL DATA

Size	Volume	Connections number and dimensions									Dimensions (mm)			Max. pressure	Mass
	l	1/2''	3/4''	1''	6/4''	2''	DN50	DN80	DN100	DN150	H	D	L	bar	kg
Vertical pressure vessels															
50	47	7	-	-	-	-	-	-	-	-	920	300	-	13	25
100	101	6	-	-	-	1	-	-	-	-	1375	350	-	13	45
150	136	6	-	-	-	1	-	-	-	-	1395	400	-	13	55
200	199	3	-	4	-	-	-	-	-	-	1430	480	-	13	85
300	287	1	2	4	-	-	-	-	-	-	1930	480	-	13	115
500	496	1	2	4	-	-	-	-	-	-	2025	622	-	13	135
750	739	1	2	4	-	-	-	-	-	-	2090	750	-	13	170
1000	975	1	-	2	4	-	-	-	-	-	2140	850	-	13	260
1500	1368	1	-	2	-	4	-	-	-	-	2295	1000	-	13	310
2000	1853	1	-	2	-	4	-	-	-	-	2370	1150	-	13	460
3000	2825	1	-	2	-	4	-	-	-	-	2905	1250	-	13	630
4000	4028	1	-	2	-	-	-	4	-	-	3915	1250	-	13	810
5000	5121	1	-	2	-	-	-	4	-	-	3915	1400	-	13	1350
6000	5801	1	-	2	-	-	-	-	4	-	3510	1600	-	13	1750
8000	7707	1	-	2	-	-	-	-	4	-	4105	1700	-	13	2190
10000	9953	1	-	2	-	-	-	-	4	-	5200	1700	-	10	2500
15000	15498	1	-	1	-	-	1	-	-	4	4860	2200	-	10	3750
20000	21073	1	-	1	-	-	1	-	-	4	6360	2200	-	10	4710
25000	24790	1	-	1	-	-	1	-	-	4	7360	2200	-	10	5360
Horizontal pressure vessels															
50	47	6	-	-	-	-	-	-	-	-	400	300	775	13	25
100	101	5	-	-	-	1	-	-	-	-	505	350	1205	13	45
150	136	5	-	-	-	1	-	-	-	-	550	400	1220	13	55
200	199	3	-	3	-	-	-	-	-	-	635	480	1265	13	85
300	287	1	2	3	-	-	-	-	-	-	625	480	1770	13	115
500	496	1	2	-	3	-	-	-	-	-	820	622	1835	13	135
750	739	1	2	-	3	-	-	-	-	-	1025	750	1890	13	170
1000	975	1	-	2	3	-	-	-	-	-	1130	850	1935	13	260
1500	1368	1	-	2	-	3	-	-	-	-	1275	1000	2000	13	310
2000	1853	1	-	2	-	3	-	-	-	-	1500	1150	2100	13	460
3000	2825	1	-	2	-	-	-	3	-	-	1600	1250	3100	13	630
4000	4028	1	-	2	-	-	-	3	-	-	1600	1250	3600	13	810
5000	5121	1	-	2	-	-	-	3	-	-	1750	1400	3665	13	1350
6000	5801	1	-	2	-	-	-	-	3	-	1950	1600	3250	13	1750
8000	7707	1	-	2	-	-	-	-	3	-	2050	1700	3810	13	2190
10000	9953	1	-	2	-	-	-	-	3	-	2050	1700	4810	10	2500
15000	15498	1	-	1	-	-	1	-	-	3	2550	2200	4600	10	3750
20000	21073	1	-	1	-	-	1	-	-	3	2550	2200	6100	10	4710
25000	24790	1	-	1	-	-	1	-	-	3	2550	2200	7100	10	5360

For any non standard pressure vessel (based on operating media, design pressure, design temperature, standard, ...) please contact producer or your local distributor.

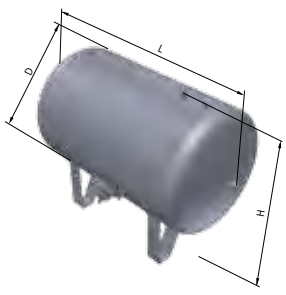

Horizontal pressure vessel

Vertical pressure vessel

TP ASME SERIES

PRESSURE VESSELS - ASME

operating pressure	on request
operating temp.range	on request
design	on request

APPLICATIONS

• compressed air systems

DESCRIPTION

Pressure vessels are tanks, designed to store compressed air. On request Pressure vessels can also be designed for any other technical gas. Volume of pressure vessel depends on compressor capacity and on consumption of compressed air.

The supply of pressure vessel includes:
- Anticorrosion protection with basic colour painting and final painting
- ASME – certificate
- Revision openings
- Supporting legs
- Connections for optional equipment

ASME U

ASME UM

TP SERIES

CUSTOM MADE PRESSURE VESSELS

operating pressure	on request
operating temp.range	on request
design	on request

APPLICATIONS

• compressed air systems

DESCRIPTION

Omega Air d.o.o is also a producer of custom made pressure vessels according to PED or ASME standards.

Each of our pressure vessels is calculated, assembled, tested and guaranteed to conform standards and to withstand the process necessary for your application.

Custom made pressure vessels can include a diverse range of:

- sizes and volumes,
- horizontal or vertical designs,
- modular or packaged systems,
- speciall alloys and materials,
- high or low pressure ratings,
- heating and cooling options,
- accessory valves and piping,
- ladders and platforms,
- anticorrosion protection...

Compressed air equipment

PP SERIES

PAINTING AIR FILTRATION SYSTEMS

operating pressure	**16** bar
volume flow rate	**78** to **235** Nm^3/h
connections	**1/2''**
operating temp. range	**1,5** to **65** °C
standard colour	**RAL 9005**

APPLICATIONS

- chemical
- petrochemical
- paint
- general industrial applications
- breathing air

DESCRIPTION

PP pro paint system is specifically designed for purifying compressed air from solid, liquid and partially gaseous components. Protecting air equipment in addition to providing clean air for worker health protection. PP pro paint system is easy for wall mount.

Available modular combinations:

1. Compressed air for lower quality demands (down to 15 µm)
2. Compressed air for basic quality demands (down to 0,1 µm)
3. Compressed air for high quality demands (down to 0,01 µm)
4. Technical absolutely clean air (down to 0,1 µm, activated carbon)
5. Technical and breathable air
6. Compressed air for highest demands (all in one unit)

TECHNICAL DATA							Separator CKL-PP	Microfilter M 0,1µm	Microfilter S 0,01µm	Active carbon A	Sterile filter with active carbon SFA	Adsorption dryer A-DRY 105	Pressure regulator	Quick coupling No.
Model	Pipe size	Flow rate at 7 bar(g), 20 °C		Dimensions (mm)										
	inch	Nm³/h	scfm	A	B	C								
PP-107	1/2''	155	91	270	135	276	✓						✓	2
PP-110	1/2''	235	138	270	135	345	✓						✓	2
PP-207	1/2''	78	46	380	135	276	✓	✓					✓	2
PP-210	1/2''	120	71	380	135	345	✓	✓					✓	2
PP-307	1/2''	78	46	490	135	276	✓	✓	✓				✓	2
PP-310	1/2''	120	71	490	135	345	✓	✓	✓				✓	2
PP-407	1/2''	78	46	580	135	276		✓	✓	✓			✓	4
PP-410	1/2''	120	71	580	135	345		✓	✓	✓			✓	4
PP-507	1/2''	78	46	612	135	370		✓	✓		✓		✓	4
PP-510	1/2''	120	71	612	135	440		✓	✓		✓		✓	4
PP-607	1/2''	78	46	1150	335	917		✓	✓		✓	✓	✓	4
PP-610	1/2''	120	71	1150	335	917		✓	✓		✓		✓	4

CORRECTION FACTORS															
Operating pressure [bar]	2	3	4	5	6	7	8	9	10	11	12	13	14	15	16
Operating pressure [psi]	29	44	58	72	87	100	115	130	145	160	174	189	203	218	232
Correction factor	0,38	0,50	0,63	0,75	0,88	1	1,13	1,25	1,38	1,50	1,63	1,75	1,88	2,00	2,13

B-AIR SERIES

BREATHING AIR FILTRATION SYSTEMS

operating pressure	**16** bar
volume flow rate	**78** to **780** Nm^3/h
connections	**1/2''** to **1 1/2''**
operating temp. range	**1,5** to **65** °C
standard colour	**RAL 1016**

APPLICATIONS

- breathing air

DESCRIPTION

B-AIR™ point of use filter set is designed for high efficient preparation of top quality breathing air. On request B-AIR™ filter set can be supplied with wall mounting brackets, pressure regulator and quick couplings.

WARNING!
Breathing air filter set B-AIR is not declared as CO_2 and CO removal filter. Despite that B-AIR comprises filter element which can reduce CO content.

TECHNICAL DATA									FILTER ELEMENTS		
Filter model	**Pipe size**	**Flow rate** [2] at 7 bar(g), 20 °C		**Dimensions [mm]**				**Mass**	**S** Microfilter 0,01 µm	**H²** catalyst (hopcalite)	**A²** adsorption (act. carbon)
	inch	Nm³/h	scfm	A	B	C	D	kg			
B-AIR 0076	1/2"	78	46	187	88	20	60	3x0,47	07050 S	07050 H²	07050 A²
B-AIR 0106	3/4"	120	70	257	88	20	80	3x0,6	14050 S	14050 H²	14050 A²
B-AIR 0186	1"	198	116	263	125	32	100	3x1,57	12075 S	12075 H²	12075 A²
B-AIR 0306	1"	335	197	363	125	32	120	3x2,2	22075 S	22075 H²	22075 A²
B-AIR 0476	1 1/2"	510	300	461	125	32	140	3x2,8	32075 S	32075 H²	32075 A²
B-AIR 0706	1 1/2"	780	459	640	125	32	160	3x3,9	50075 S	50075 H²	50075 A²

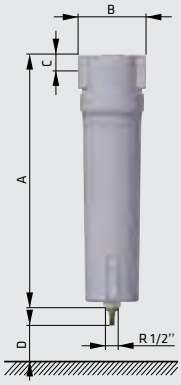

quality class - solids (ISO 8573-1)	1	1	1 [1]
quality class - oils (ISO 8573-1)	1	-	0/1
residual oil content	<0,01 mg/m³	-	<0,005
pressure drop - new element-dry [mbar / psi]	80 / 1,160	see spec.	see spec.
pressure drop - new element-wet [mbar / psi]	190 / 2,756	-	-
change filter element at pressure drop [mbar / psi]	3 months		
filter media	borosilicate micro fibes	borosilicate micro fibes, hopcalite	borosilicate micro fibes, activated carbon
min. operating temperature (°C / °F)	1,5 / 35	1,5 / 35	1,5 / 35
max. operating temperature (°C / °F)	45 / 113	45 / 113	45 / 113

CORRECTION FACTORS															
Operating pressure [bar]	2	3	4	5	6	7	8	9	10	11	12	13	14	15	16
Operating pressure [psi]	29	44	58	72	87	100	115	130	145	160	174	189	203	218	232
Correction factor	0,38	0,50	0,63	0,75	0,88	1	1,13	1,25	1,38	1,50	1,63	1,75	1,88	2,00	2,13

[1] Valid if "S" filter cartridge is installed upstream.
[2] For optimum flow refer to technical data sheet

B-AIR plus SERIES

BREATHING AIR FILTRATION SYSTEMS

operating pressure	**0 - 16** bar
volume flow rate	**120** Nm^3/h
connections	**quick couplings**
operating temp. range	**1,5** to **40** °C
standard colour	**RAL 1016**

APPLICATIONS

- breathing air

DESCRIPTION

B-AIR PLUS system is specifically designed for applications where high quality breathing air and monitoring of breathing air supply are needed. B-AIR PLUS is a combination of our B-AIR 0106 breathing air filter set combined with gas concentration analysers, fitted with pressure regulator and quick couplings, all packed in a compact and robust casing.

Gas concentration analysers constantly monitor CO, CO_2 and O_2 concentrations and trigger an alarm if concentrations exceed the EN12021 and BS4275:1997 standard compliant values. In this way B-AIR PLUS can safely provide high quality breathing air for up to 5 people.

Small dimensions and low weight enable the use of B-AIR PLUS in many applications as it can be transported and set up with ease.

TECHNICAL DATA	
Operating pressure range	0 - 16 bar (0 - 232 psi)
Opreating temperature range	1,5 - 40 °C (35 - 104°F)
Connection (inlet/outlet)	INLET (male), OUTLET (female)
Flow rate (7 bar ,20 °C)	120 Nm^3/h (71 scfm)
Quality class - solids	ISO 8573-1
Quality class - oils	ISO 8573-1
Filtration stage S	solid and liquid particle filtrationdown to 0,01 µm
Filtration stage H^2	CO removal
Filtration stage A^2	oil particle filtration down to 0,1 µm
GAS ANALYSERS	
Electrical connection	230 VAC, 50/60 Hz
Power consumption	<10 W
CO monitoring	warning 3 ppm, alarm 5 ppm
CO_2 monitoring	alarms (increasing intensity) at 500 ppm/1500 ppm
O_2 monitoring	alarm at O_2 concentration <19,5%
Analyser approval	EN 50270:1999 EN 61000-6-3:2001+A11:2004 BS EN 61010-1:2001 IEC 61010-1 (2ed) AS 61610.1-2003 (Australia & New Zeland)
Protection class of sensors	IP 65
Dimensions	508 x 460 x 160 mm
Weight	12 kg

ADVANTAGES

- ✓ High quality breathing air for up to 5 people
- ✓ Air quality monitoring (EN 12021, BS 4275:1997)
- ✓ Compact & light weight

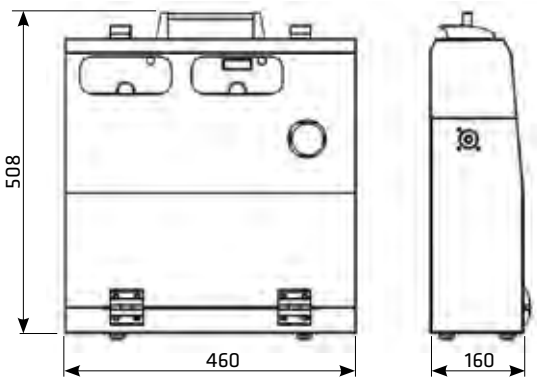

AIRWATT SERIES

HEAT RECOVERY UNITS

heat capacitz	**10** to **100** kW
for compressor capac.	**15** to **132** kW

APPLICATIONS

- heat recovery in oil lubricated rotary screw compressors

DESCRIPTION

Compressors in their process of air compression consume energy, which is converted into pressure energy of compressed air. The consequence of the air compression is the generation of heat, which can cause overheating of the system, and thus damage of system components.

Classical systems of the screw compressor have a regulated air cooling of the lubricating oil, which means that the excess heat is discharged into the ambient by the fan. In this way the heat is completely lost.

This heat can be useful and at no additional cost exploited for heating of domestic hot water or water for central heating system.

AirWATT - external heat recovery system is a perfect system for this application. The unit has two separate piping systems - water and oil circuit with counterflow media. The heat through the heat exchanger passes from the hot oil of the compressor to the cold water system and the heating is thereby heated.

The unit is controlled by means of a thermostatic valve, which prevents oil freezing and thus possible damage to the compressor.

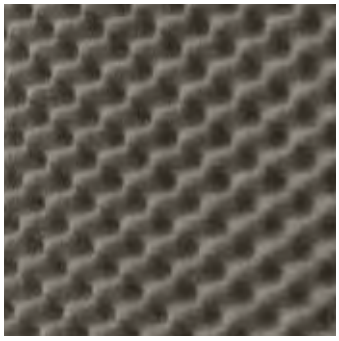

TECHNICAL DATA

Type	Motor power	Heat capacity	Oil connection	Water connection	Dimensions [mm]			Mass
	kW	kW	G	G	A	B	C	kg
AirWATT 22	15-22	12-17,6	1 1/4''	1''	360	500	760	33
AirWATT 37	26-37	20,8-29,6	1 1/4''	1''	360	500	760	35
AirWATT 75	45-75	36-60	1 1/4''	1''	360	500	760	42
AirWATT 100	90-132	72-100	2''	2''	450	600	860	58

TECHNICAL SPECIFICATIONS

Operating pressure (oil)	1 – 16 bar
Maximum water pressure	10 bar
Operating temperature	5°C – 120°C
Max. outlet water temperature	70°C
Pressure drop (oil)	~ 100mbar
Ambient temperature	5°C – 45°C
Water temperature indicator	Analog mechanical

Type	Classification according to Pressure Equipment Directive PED 97/23 / CE (fluid group 2)
AirWATT 22	not necessary
AirWATT 37	not necessary
AirWATT 75	not necessary
AirWATT 100	not necessary

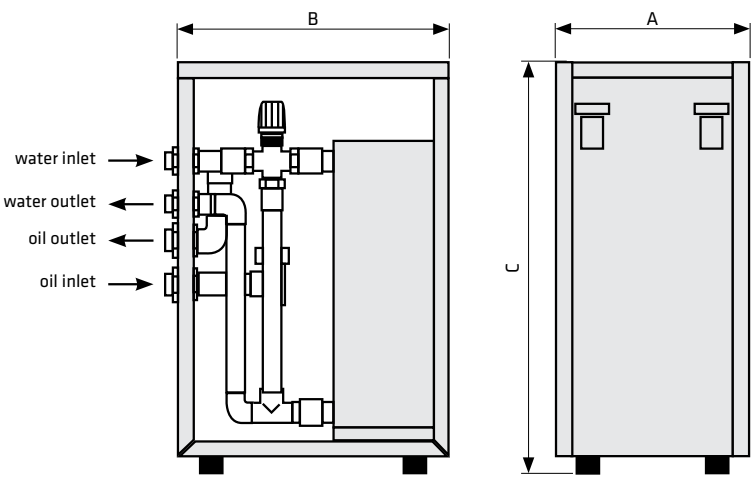

BS 12-3,5

PETROL STATION EQUIPMENT

operating pressure	**max 12** bar
operating temp.range	up to **45** °C
flow rate (ISO 1217)	**350** Nl/min

APPLICATIONS

- filling tyres with compressed air
- water supply

BS12-3.5 series can be used in variety of applications. For applications not listed please contact producer or your local distributor.

DESCRIPTION

BS 12-3.5 (Air-water supply) unit is an ideal solution for every gas/petrol station. It offers top quality supply with compressed air and water.

High quality piston compressor with pressure vessel is integrated into vandal protected stainless steel housing.

Integrated AWS-C controller assures precise and user friendly inflating of tyres.

MAIN COMPONENTS

- robust stainless steel housing,
- integrated compressor,
- integrated pressure gauge,
- integrated pressure gauge which shows current pressure in pressure vessel,
- hose (drive over) for compressed air supply,
- hose (drive over) for water supply,
- standard DIN connector,
- noise protection / isolation,
- quick coupling,
- handy pipe for water supply
- vandal protection.

TECHNICAL DATA	BS12-3,5
Operating pressure	max. 12 bar(g) (max. 174 psi)
Operating temperature range *	-15 to +45 °C (5 to 113 °F)
Flow capacity (ISO 1217)	350 Nl/min
Power supply	230 V / 50 Hz
Electric motor power	1,8 kW
Sound level (A) 1m	67 ± 2 dB
Electric heater power	Optional
Hose length	8 m
Mass	136 kg
Housing material	Stainless steel (INOX)
Pressure vessel material	Carbon steel
Pressure vessel capacity	25 l

* If temperatures below 1,5 °C are expected please contact producer or your local distributor.

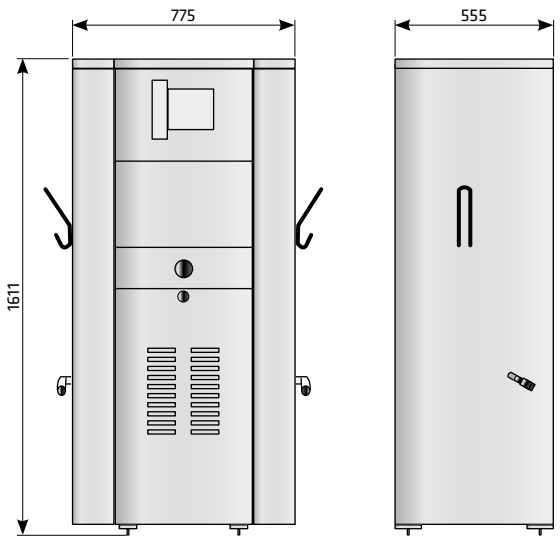

AWS

PETROL STATION EQUIPMENT

operating pressure	**max 10** bar
operating temp.range	up to **45** °C
flow rate (ISO 1217)	**170** Nl/min

APPLICATIONS

- filling tyres with compressed air
- water supply

AWS series can be used in variety of applications. For applications not listed please contact producer or your local distributor.

DESCRIPTION

AWS (Air-water supply) unit is an ideal solution for every gas/petrol station. It offers top quality supply with compressed air and water.

High quality piston compressor with pressure vessel is surrounded by vandal protected stainless steel housing.

Integrated AWS-C controller assures precise inflating of tyres and is user friendly.

MAIN COMPONENTS

- robust stainless steel housing,
- integrated compressor,
- integrated pressure gauge,
- hose (drive over) for compressed air supply,
- hose (drive over) for water supply,
- standard DIN connector,
- noise protection / isolation,
- quick coupling,
- handy pipe for water supply,
- vandal protection.

TECHNICAL DATA	AWS
Operating pressure	max. 10 bar(g) (max. 145 psi)
Operating temperature range *	-15 to +45 °C (5 to 113 °F)
Flow capacity (ISO 1217)	170 Nl/min
Power supply	230 V / 50 Hz
Electric motor power	1,5 kW
Sound level (A) 1m	68 ± 2 dB
Electric heater power	Optional
Hose length	8 m
Mass	87 kg
Housing material	Stainless steel (INOX)
Pressure vessel material	Carbon steel
Pressure vessel capacity	17 l

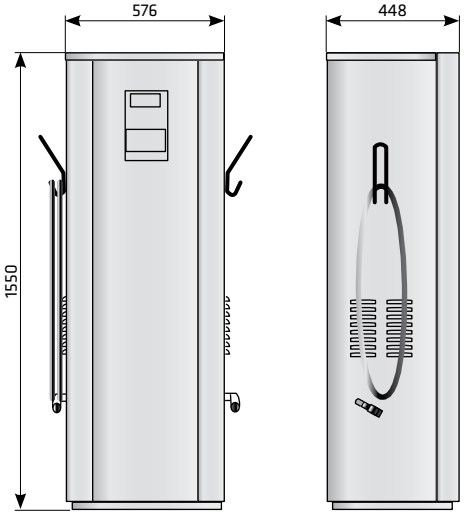

* If temperatures below 1,5 °C are expected please contact producer or your local distributor.

PETRO-PACK

PETROL STATION EQUIPMENT

operating pressure	**max 12** bar
operating temp.range	up to **45** °C
flow rate (ISO 1217)	**350** Nl/min

APPLICATIONS

- filling tyres with compressed air
- water supply

PETRO-PACK series can be used in variety of applications. For applications not listed please contact producer or your local distributor.

DESCRIPTION

PETRO-PACK unit is a compressor designed for petrol station applications. It is perfect solutions for stations where is no place for inside installation. It offers top quality supply with compressed air.

All connections are ground mounted. High quality piston compressor with pressure vessel is surrounded by vandal protected stainless steel housing.

MAIN COMPONENTS

- robust stainless steel housing,
- integrated compressor,
- noise protection / isolation,
- vandal protection.

TECHNICAL DATA	PETRO-PACK
Operating pressure	max. 12 bar(g) (max. 174 psi)
Operating temperature range *	-15 to +45 °C (5 to 113 °F)
Flow capacity (ISO 1217)	350 Nl/min
Power supply	400 V / 50 Hz
Electric motor power	2,2 kW
Sound level (A) 1m	67 ± 2 dB
Electric heater power	Optional
Mass	108 kg
Housing material	Stainless steel (INOX)
Pressure vessel material	Carbon steel
Pressure vessel capacity	25 l

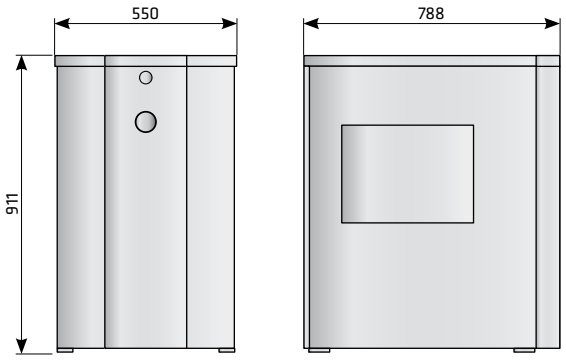

* If temperatures below 1,5 °C are expected please contact producer or your local distributor.

BS TOWER

PETROL STATION EQUIPMENT

operating pressure	**max 12** bar
operating temp.range	up to **45** °C

APPLICATIONS

- filling tyres with compressed air
- water supply

BS TOWER series can be used in variety of applications. For applications not listed please contact producer or your local distributor.

DESCRIPTION

BS tower (Air-water supply) unit is an ideal solution for every gas/petrol station. It offers top quality supply with compressed air and water where compressed air and water systems are supplied from dislocated source.

Integrated AWS-C controller assures precise inflating of tyres and is user friendly.

MAIN COMPONENTS

- robust stainless steel housing,
- integrated pressure gauge,
- hose (drive over) for compressed air supply,
- hose (drive over) for water supply,
- standard DIN connector,
- quick coupling,
- handy pipe for water supply.

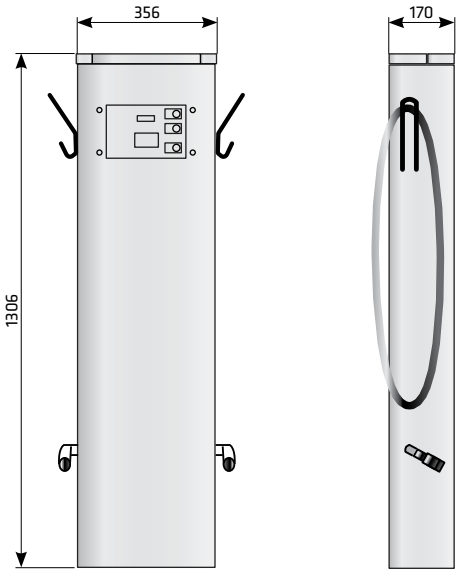

TECHNICAL DATA	BS TOWER
Operating pressure	max. 12 bar(g) (max. 174 psi)
Operating temperature range *	-15 to +45 °C (5 to 113 °F)
Electric heater power	Optional
Hose length	8
Housing material	Stainless steel (INOX)

* If temperatures below 1,5 °C are expected please contact producer or your local distributor.

Industrial projects

NG SERIES

NITROGEN GENERATORS

operating pressure	**6** to **10** bar
operating temp.range	**5** to **40** °C
ambient air temp.	**5** to **45** °C
dew points (atmosph.)	**-40**°C

APPLICATIONS

- Blanketing of Chemicals and Pharmaceuticals
- Gas Assisted Injection Moulding (GAIM)
- Heat Treatment of Ferrous & Non-Ferrous Metals
- Inerting of Flammable Liquids
- Laser Cutting
- Prevention of Dust Explosions
- Re-flow and Wave Soldering of PCBs
- UV-Curing of Coatings
- Food

DESCRIPTION

The NG generators extract the available nitrogen in the ambient air from the other gases by applying the Pressure Swing Adsorption (PSA) technology. During the PSA process compressed, cleaned ambient air is led to a molecular sieve bed, which allows the nitrogen to pass through as a product gas, but adsorbs other gases.

The sieve releases the adsorbed gases to the atmosphere, when the outlet valve is closed and the bed pressure returns to ambient pressure. Subsequently the bed will be purged with nitrogen before fresh compressed air will enter for a new production cycle. In order to guarantee a constant product flow, NG nitrogen generators use modules of two molecular sieve beds, which alternatively switch between the adsorption and the regeneration phase.

Under normal operating conditions and with correct maintenance the molecular sieve beds will have an almost indefinite lifetime.

STANDARD EQUIPMENT

- Set of External Feed Air Filters
- Adsorber Vessel Module(s) in Anodised Aluminium
- Pneumatic Valves
- Internal Piping & Fittings in Stainless Steel 316
- Maintenance-free Exhaust Silencers
- Air and Nitrogen Pressure Regulation
- Local Instrumentation
- Control System with Rockwell/Allen-Bradley PLC
- Touch Screen Operator Interface with Datalogging
- Pressure Switch for Automated Idle-Mode

OPTIONAL EQUIPMENT

- Dual Bank Slave Unit(s)
- Supporting Frame for Air Filters
- Oxygen Analyser with Zirconium-Oxide Sensor
- Electronic Product Flow Meter
- Feed Air / Product Moisture Analyser
- Feed Air / Product Pressure Transmitters
- Feed Air / Product Temperature Transmitters
- Nitrogen Sterile Filters
- Telemetry
- Nitrogen Booster
- Nitrogen Cylinder Filling System

TECHNICAL DATA

Type	Connection		Dimensions [mm]			Mass
	In	Out	L	B	H	kg
NG 8	1''	1/2''	637	520	1345	210
NG 16	1''	1/2''	865	520	1345	315
NG 24	1''	1/2''	1093	520	1345	420
NG 32	1''	1/2''	1321	520	1345	525
NG 40	1''	1/2''	1549	520	1345	630
NG 48	1''	1/2''	1777	520	1345	735
NG 56	1''	1/2''	2005	520	1345	840
NG 64	1''	1/2''	2233	520	1345	945

PERFORMANCE

Type	Inlet pressure	Discharge press.	Residual Oxygen [vol. %]						
	barg	barg	3	2	1	0,5	0,1	0,01	0,001
			Residual Nitrogen [vol. %]						
			96,00	96,97	97,87	98,17	98,47	-[1]	-[1]
			Residual Argon [vol. %]						
			1,00	1,03	1,13	1,33	1,43	-[1]	-[1]
			Total inert gas purity [vol. %]						
			97	98	99	99,5	99,9	99,99	99,999
NG 8	8	7,5	11,1	9,8	8,0	6,9	3,7	2,2	1,4
	Feed air consumption [Nm³/h]		12,6	12	14,4	19,2	18,6	21	22,2
	10	8	14,1	13,4	10,0	7,6	3,9	2,6	1,2
	Feed air consumption [Nm³/h]		15,6	13,8	15	21	24	28,8	28,2
NG 16	8	7,5	22,1	19,6	16,0	13,8	7,4	4,4	2,7
	Feed air consumption [Nm³/h]		24,6	23,4	28,8	38,4	37,8	42	44,4
	10	8	28,2	26,8	20,1	15,1	7,8	5,1	2,5
	Feed air consumption [Nm³/h]		30,6	28,2	30,6	42,6	47,4	57,6	57
NG 24	8	7,5	33,2	29,4	24,0	20,6	11,1	6,5	4,1
	Feed air consumption [Nm³/h]		36,6	35,4	43,2	57,6	56,4	63	66,6
	10	8	42,3	40,2	30,1	22,7	11,7	7,7	3,7
	Feed air consumption [Nm³/h]		46,2	42	45,6	63,6	71,4	87	85,2
NG 32	8	7,5	44,3	39,2	32,0	27,5	14,8	8,7	5,4
	Feed air consumption [Nm³/h]		49,2	47,4	57,6	76,8	75	84	88,8
	10	8	56,4	53,7	40,2	30,3	15,6	10,3	5,0
	Feed air consumption [Nm³/h]		61,2	55,8	61,2	84,6	94,8	115,8	113,4
NG 40	8	7,5	55,4	49,1	40,0	34,4	18,5	10,9	6,8
	Feed air consumption [Nm³/h]		61,2	58,8	72	95,4	94,2	105	111
	10	8	70,5	67,1	50,2	37,9	19,5	12,9	6,2
	Feed air consumption [Nm³/h]		76,8	70,2	76,2	106,2	118,8	144,6	142,2
NG 48	8	7,5	66,4	58,9	48,0	41,3	22,2	13,1	8,2
	Feed air consumption [Nm³/h]		73,8	70,8	86,4	114,6	112,8	126	133,2
	10	8	84,6	80,5	60,2	45,4	23,4	15,4	7,5
	Feed air consumption [Nm³/h]		92,4	84	91,2	127,2	142,8	173,4	170,4
NG 56	8	7,5	77,5	68,7	56,0	48,1	25,9	15,2	9,5
	Feed air consumption [Nm³/h]		85,8	82,2	100,2	133,8	131,4	147	154,8
	10	8	98,7	93,9	70,3	53,0	27,3	18,0	8,7
	Feed air consumption [Nm³/h]		107,4	97,8	106,8	148,2	166,2	202,2	198,6
NG 64	8	7,5	88,6	78,5	64,0	55,0	29,6	17,4	10,9
	Feed air consumption [Nm³/h]		97,8	94,2	114,6	153	150,6	168	177
	10	8	112,8	107,3	80,3	60,6	31,2	20,6	10,0
	Feed air consumption [Nm³/h]		123	112,2	121,8	169,8	190,2	231	227,4

[1] For concentrations at higher purity please contact manufacturer.
All flow rates valid for generator operation at ambient conditions 20 °C, 1.013,25 mbar and 60% RH. Please consult the latest version of the BT-Sizer System Sizing Software for flow rates at different ambient conditions. All values for a single Nitrogen Generator without Dual Bank(s).

OG SERIES

OXYGEN GENERATORS

operating pressure	**7** to **7,5** barg
operating temp.range	**5** to **35** °C
ambient air temp.	**5** to **45** °C
dew points (atmosph.)	**-60**°C

APPLICATIONS

- Aquaculture
- Feed Gas for Ozone Generators
- Glass blowing
- Leaching
- NOx Reduction for Fuel Burners
- Oxygen Lancing
- Welding, Brazing
- Wellness

DESCRIPTION

The OG series oxygen generators extract the available oxygen in the ambient air from the other gases by applying the Pressure Swing Adsorption (PSA) technology. During the PSA process compressed, cleaned ambient air is led to a molecular sieve bed, which allows the oxygen to pass through as a product gas, but adsorbs other gases.

The sieve releases the adsorbed gases to the atmosphere, when the outlet valve is closed and the bed pressure returns to ambient pressure. Subsequently the bed will be purged with oxygen before fresh compressed air will enter for a new production cycle.

In order to guarantee a constant product flow, oxygen generators use modules of two molecular sieve beds, which alternatively switch between the adsorption and the regeneration phase. Under normal operating conditions and with correct maintenance the molecular sieve beds will have an almost indefinite lifetime.

STANDARD EQUIPMENT

- Feed Air Filters
- Adsorber Vessel Module(s)
- Pneumatic Valves with SS316L Bodies
- Internal Piping & Fittings in SS316
- Exhaust Mufflers
- Oxygen Pressure Regulation
- Local Instrumentation
- Control System with Allen-Bradley PLC
- Pressure Switch for Automated Idle-Mode

OPTIONAL EQUIPMENT

- Dual Bank Unit (max. 3)
- Oxygen Analyzer
- Electronic Product Flow Meter
- Touch screen or Semi-Graphical Operator Interface
- Telemetry, even through GSM or Ethernet
- Sterile Filters
- External O_2 Analyzing System incl. PDP, CO/CO_2
- MedOx External Control System for Duplex Units
- Oxygen Booster with Cylinder Filling System

TECHNICAL DATA						
Type	Connection		Dimensions [mm]			Mass
	In	Out	L	B	H(H)*	kg
OG 03	1''	1''	780	560	1672 (1510)	306
OG 05	1''	1''	1048	560	1672 (1510)	458
OG 08	1''	1''	1316	560	1672 (1510)	609
OG 10	1''	1''	1584	560	1672 (1510)	759
OG 13	1''	1''	1852	560	1672 (1510)	910
OG 15	1''	1''	2120	560	1672 (1510)	1061

* Dimensions for slave unit

PERFORMANCE					
Type	Inlet pressure	Discharge pressure	OXYGEN PURITY [%]		
	[barg]	[barg]	90	93[1]	95
OG 03	7,5	6,1 (± 0,5 bar)	2,6	2,5	2,5
	Feed air consumption [Nm³/h]		28,2	28,2	28,2
OG 05	7,5	6,1 (± 0,5 bar)	5,3	5,1	5,0
	Feed air consumption [Nm³/h]		56,4	56,4	56,4
OG 08	7,5	6,1 (± 0,5 bar)	8,0	7,8	7,6
	Feed air consumption [Nm³/h]		84	84	84
OG 10	7,5	6,1 (± 0,5 bar)	10,5	10,2	10,0
	Feed air consumption [Nm³/h]		111,6	111,6	111,6
OG 13	7,5	6,1 (± 0,5 bar)	13,1	12,7	12,5
	Feed air consumption [Nm³/h]		139,2	139,2	139,2
OG 15	7,5	6,1 (± 0,5 bar)	15,5	15,1	14,8
	Feed air consumption [Nm³/h]		168	168	168

(1) Purity according to the Oxygen 93 Monograph of European Pharmacopoeia 7.1 and USP 23 and conform ISO 10083 standard.
Flow rates at standard atmospheric conditions (20 °C / 70 °F, 1013 mbar / 14,7 psi and 60% RH).

COMPRESSED AIR STATIONS

CUSTOM MADE SOLUTIONS

APPLICATIONS

CUSTOM MADE SOLUTIONS FOR:
- general industrial applications
- automotive
- electronics
- food and beverage
- petrochemical
- plastics
- paint
- packing industry
- biotechnology
- breweries
- chemical industry
- dairies
- fermentation processes
- pharmaceutical industry
- hospitals...

DESCRIPTION

Our specialty is the design and construction of compressor stations according to specific requirements of our customers.

We carry out measurements of production process requirements on the basis of which the compressed air station project is made.

Professional approach to the project ensures reliable operation, maximum space utilization and high energy performance. Only high quality devices and materials are used.

MICRO BIOGAS PLANTS

electric power	**10** to **50** kW
heat power	**15** to **80** kW

APPLICATIONS

- farms with organic wastes

DESCRIPTION

Micro biogas plant type MiBP is a modular system where farm wastes (animal manure in form of liquid manure or slurry, agricultural wastes, ...) are used as substrate for production of biogas based on process of anaerobic digestion.

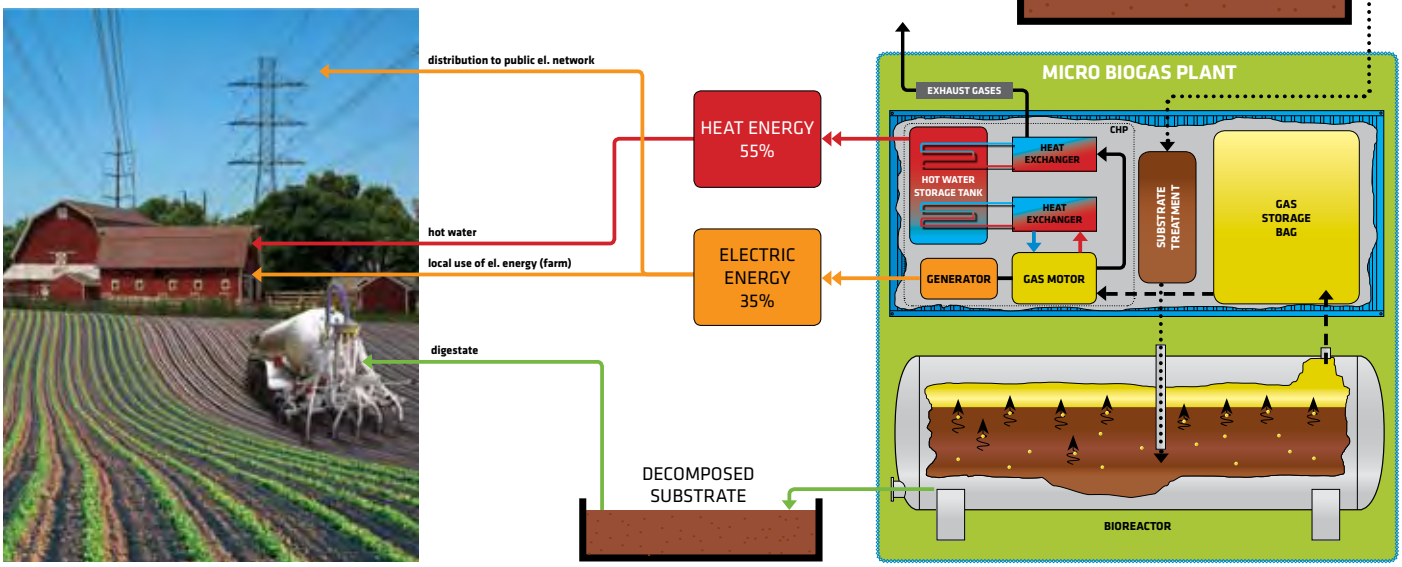

TECHNICAL DATA

Micro biogas plant type	Electric power	Heat power	Number of large livestock	Volume part of corn	Annual production of electrical energy
	kW	kW	pcs	%	kWh
MiBP 5	5	15,5	70	0	40.000
MiBP 10	7	18	90	0	56.000
MiBP 15	16	33	110	8	128.000
MiBP 20	22	43	110	12	176.000
MiBP 30	30	65	150	14	240.000
MiBP 40	43	63	150	20	334.000
MiBP 50	50	79	150	24	400.000
MiBP 60	64	103	200	20	512.000
MiBP 75	70	109	250	18	560.000

MICRO COGENERATION STATIONS

electric power	**47** to **1500** kW
heat power	**63** to **1848** kW

APPLICATIONS

• simultaneous production of electric and heat energy

DESCRIPTION

- low electricity and heat energy costs,
- low operating costs,
- greater energy efficiency,
- increased reliability of energy supply,
- use of energy independent of the public network,
- large primary energy savings,
- production of environmentally friendly energy,
- reducing of greenhouse gas emissions (CO_2) and emissions of other harmful gases (CO, SO_2, NO_x),
- ecological resources fuels (natural gas, liquefied petroleum gas, fuel or vegetable oil, biodiesel, biomass).

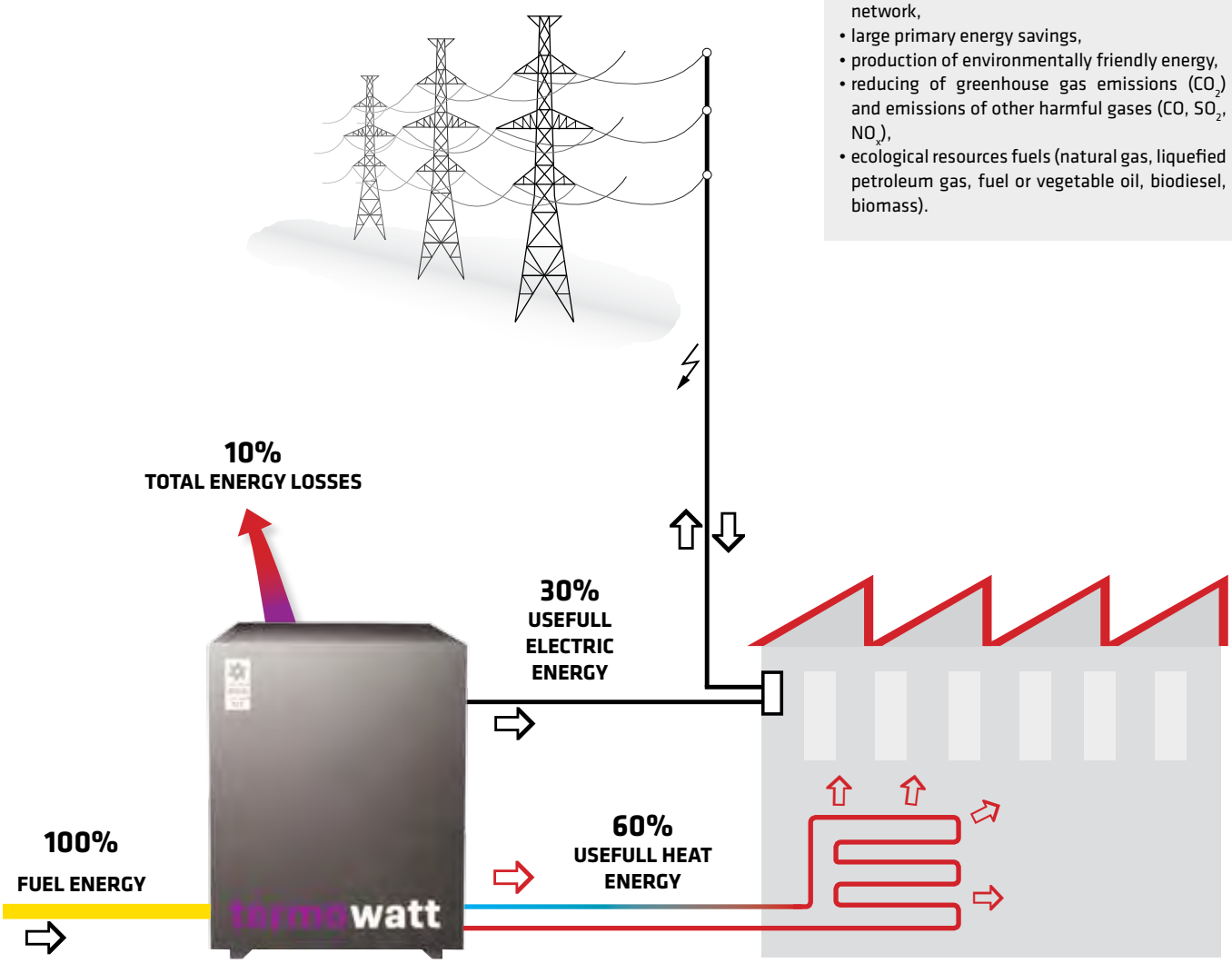

TECHNICAL DATA						
Type	Fuel power	Electric power	Heat power	Electric efficiency	Thermal efficiency	Total efficiency
Termowatt 5G	22 kW	5,5 kW	15,5 kW	25 %	70,5 %	>90 %
Termowatt 7G	26 kW	7,0 kW	18 kW	27 %	69,3 %	>90 %
Termowatt 15G	51 kW	16 kW	33 kW	31 %	64,7 %	>90 %
Termowatt 22G	68 kW	22 kW	43 kW	32 %	63,2 %	>90 %
Termowatt 30G	99 kW	30 kW	65 kW	30 %	65,6 %	>90 %
Termowatt 50G	145 kW	50 kW	90 kW	34 %	62,1 %	>90 %
C-LGE 70 MAN	204 kW	69 kW	109 kW	33,8 %	53,3 %	90 %
C-LGE 105 MAN	282 kW	105 kW	138 kW	37,1 %	49,1 %	88,1 %
C-LGE 200 MAN	538 kW	200 kW	263 kW	37,1 %	48,9 %	87,9 %

MICRO CNG STATIONS

flow rate	**5** to **40** Nm³/h
storage capacity	**280** to **1680** l

APPLICATIONS

• Filling of CNG to passenger cars, vans, forklifts...

DESCRIPTION

CNG (compressed natural gas) filling stations are used for filling of CNG powered vehicles. In CNG filling station compressor compresses the natural gas from pressure of 0,02-0,2 bar (domestic gas supply system) to 200-250 bar which is used to fill a storage tank in vehicle.
There are two different technologies used in CNG filling stations.
Slow filling station use compressor to compress the natural gas directly into the car CNG tank. This technology is used in small fleet of vehicles that are not used constantly.
In fast filling station the compressor compresses the natural gas to pressure storage tank. Compressing of natural gas to storage tank is made before filling of the car therefore storage tank is constantly full and available for filling. This technology is used in a larger fleet of vehicles and in public filling stations.

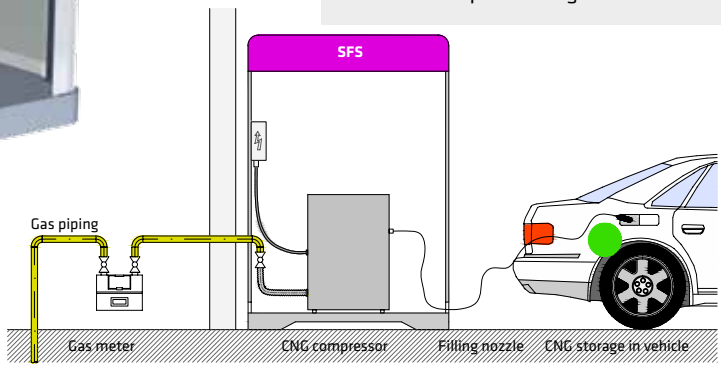

SFS
SLOW FILLING STATION

TECHNICAL DATA					
Type	Flow rate	Electric power	Inlet pressure	Maximum output pressure	Storage capacity
SFS 05	5 Nm³/h	2,2 kW/400V/230V	20 - 200 mbar	235 bar	without
SFS 10	10 Nm³/h	4,0 kW/400V/230V	17 - 200 mbar	250 bar	without
SFS20	20 Nm³/h	9,0 kW/400V/230V	17 - 300 mbar	250 bar	without

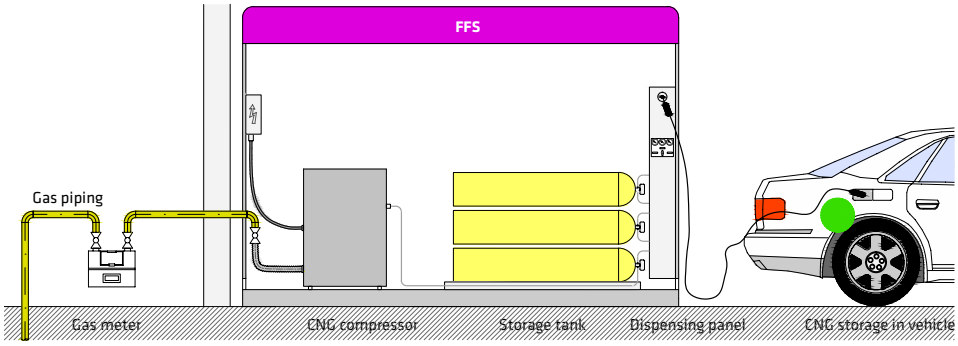

FFS
FAST FILLING STATION

TECHNICAL DATA					
Type	Flow rate	Electric power	Inlet pressure	Maximum output pressure	Storage capacity
FFS 1C05 280	5 Nm³/h	1x2,2 kW/400V/230V	20 - 200 mbar	235 bar	280 l
FFS 1C05 560	5 Nm³/h	1x2,2 kW/400V/230V	20 - 200 mbar	235 bar	560 l
FFS 2C05 560	10 Nm³/h	2x2,2 kW/400V/230V	20 - 200 mbar	235 bar	560 l
FFS 1C10 840	10 Nm³/h	1x4,0 kW/400V/230V	17 - 200 mbar	250 bar	840 l
FFS 2C10 840	20 Nm³/h	2x4,0 kW/400V/230V	17 - 200 mbar	250 bar	840 l
FFS 1C20 1680	20 Nm³/h	1x9,0 kW/400V/230V	17 - 300 mbar	250 bar	1680 l
FFS 2C20 1680	40 Nm³/h	2x9,0 kW/400V/230V	17 - 300 mbar	250 bar	1680 l

OMEGA AIR

Production

High technology CNC machines are assurance for high quality of our products. Contemporary CNC machining centres, CNC lathes, CNC wire cut machine, CNC die sinking machine, high productivity CNC turning centres and manipulation robot are the part of modern equipped mechanical department.

Contemporary pleating machines produces hundreds metres of pleated filter media, which is the essential part of each filter cartridge. Day by day, year by year, their mission is the same. Pleating the enormous quantity of filter media.

Modern equipped production departments have significant tasks which are composing, checking, testing of products in real conditions, and packaging of compressed air equipment products. The most important task is final control check, which is meant for extra elimination of faulty products.

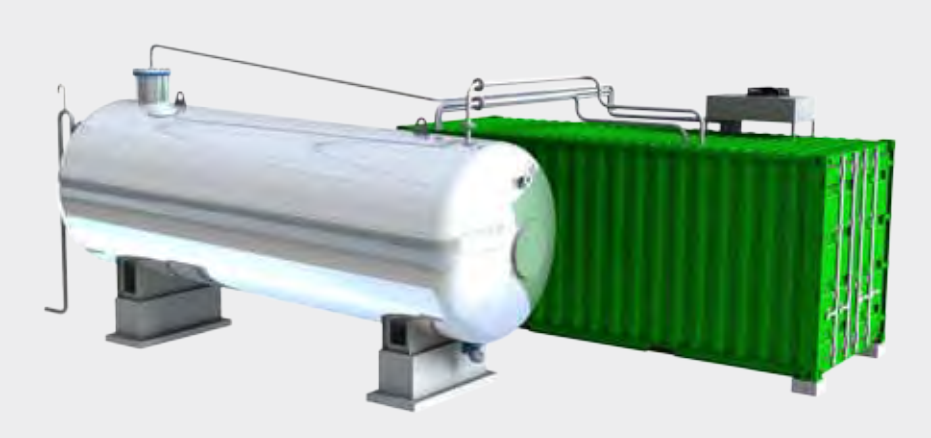

R&D

Our experts develop tailored solutions for our clients, no matter how demanding their requirements are. Wide range of experiences, technical know-how and innovations are key features, making the best solutions possible. Introducing new technologies and permanent investing in development give optimal solutions.

Our people work closely with the business to develop solutions that enable them and their clients to stay ahead of their game. Technology is a place where communication and innovation allow us to provide an unbeatable service to our clients.

Our team works closely with our clients to invent, develop and build real-world technology solutions to some of their hardest problems, as well as providing professional support services for those solutions throughout their operational lives. Through the system testing and optimisation we try to achieve the reduction of device operating costs.

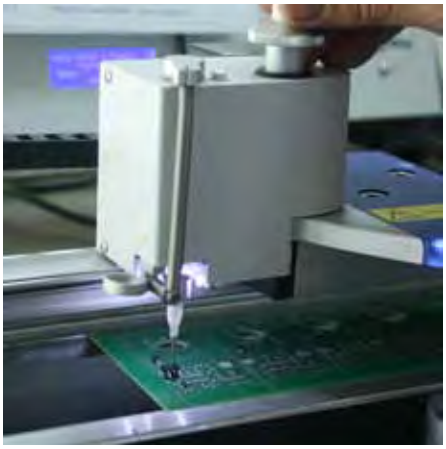

Service center

Service center is on a separate location in Logatec. It is responsible for servicing all equipment purchased in our company. The wide range of spare parts ensures the shortest possible downtime of your production plant. The replacement equipment as much as the entire mobile compressor station is available in case of major anual servicing.
Every member of service staff has its own service vehicle equipped with spare parts for the implementation of basic services, as well as all the necessary tools for their implementation. Customer service provides **24/7** customer support even outside working hours.

Service center covers the following areas:
- compressors and compressor equipment,
- air conditioning and industrial cooling processes,
- humidifiers and air heaters,
- pneumatic tools.

Quality control

Dimension control on CNC coordinate measuring machine is only one way to high quality of products. Executing of all demands of ISO and ASME standards procedures is a guarantee for top quality production. Experiences on filter cartridges designing put our company to top quality world producers. Filter cartridge is the most important part in compressed air purification.

Thatswhy we perform filter integrity test with DOP (Dispersed Oil Particulate) device and FIT (filter integrity test). Particulate counting and dimension controlling device is the next step, which we perform to achieve top quality products.

LOCATION

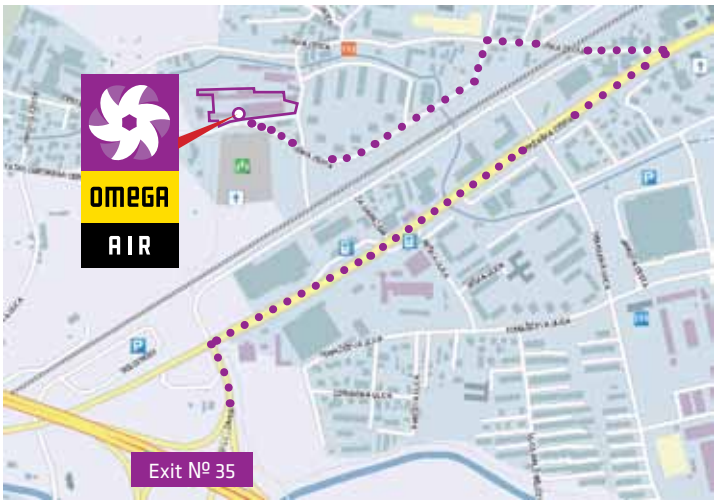

OMEGA AIR d.o.o. Ljubljana
Cesta Dolomitskega odreda 10
SI-1000, Ljubljana, Slovenia

GPS coordinates:
N: 46° 2' 27.13''
E: 14° 27' 59.46''

CUSTOMISED PRODUCTS

A large part of our manufacturing capacity is suited for customized products. We take part in the developing of the products together with our customers. If you have a project in our range of products and need a co-operating partner do not hesitate to contact us.

GENERAL TERMS OF SALES

General conditions:	Exclusively valid "The general sales conditions" of company Omega Air d.o.o. Ljubljana.
Terms of delivery:	EXW Ljubljana Incoterms 2010
Terms of payment:	Payment in advance if not otherwise agreed. Currency is EUR.
Warranty:	One year from date of delivery. Warranty valids only if the product is used in accordance with its instruction manual. Other costs such as labour costs are not included.
Changes:	We reserve the right for typing errors and right to change the prices, conditions and technical specifications of the products without previous announcement.
Packing and packing waste:	The customer in the recipient country is responsible for the recycling of packaging and disposal of waste electrical equipment in accordance with Directive 94/62/EC – Packing and Packing Waste and Directive 2002/96/EC Waste Electrical and Electronic Equipment (WEEE).
Right of ownership:	Delivered products remain in our possession until full payment has been settled.

The above mentioned sales terms and conditions are only for information. All other details are defined in writen agreement between contract parties.

OMEGA AIR

Better air

OMEGA AIR d. o. o. Ljubljana

T +386 (0)1 200 68 00
F +386 (0)1 200 68 50

info@omega-air.si

Cesta Dolomitskega odreda 10
SI-1000 Ljubljana, Slovenia
www.omega-air.si

OMEGA AIR GmbH

T +49 2841 39399-57
F +49 2841 39399-66

uwe.ohletz@omega-air.de

Eurotec-Ring 15
D-47445 Moers, Germany
www.omega-air.de

OMEGA AIR Zagreb d.o.o.

T +385 (0)1 2371 872
F +385 (0)1 2371 870

info@omega-air.hr

Anićeva 13A
HR-10000 Zagreb, Croatia
www.omega-air.hr

950098 - 04/2015